Ingersoll Rand

Air Winches & Hoists

From 125 kg to 200 t capacity

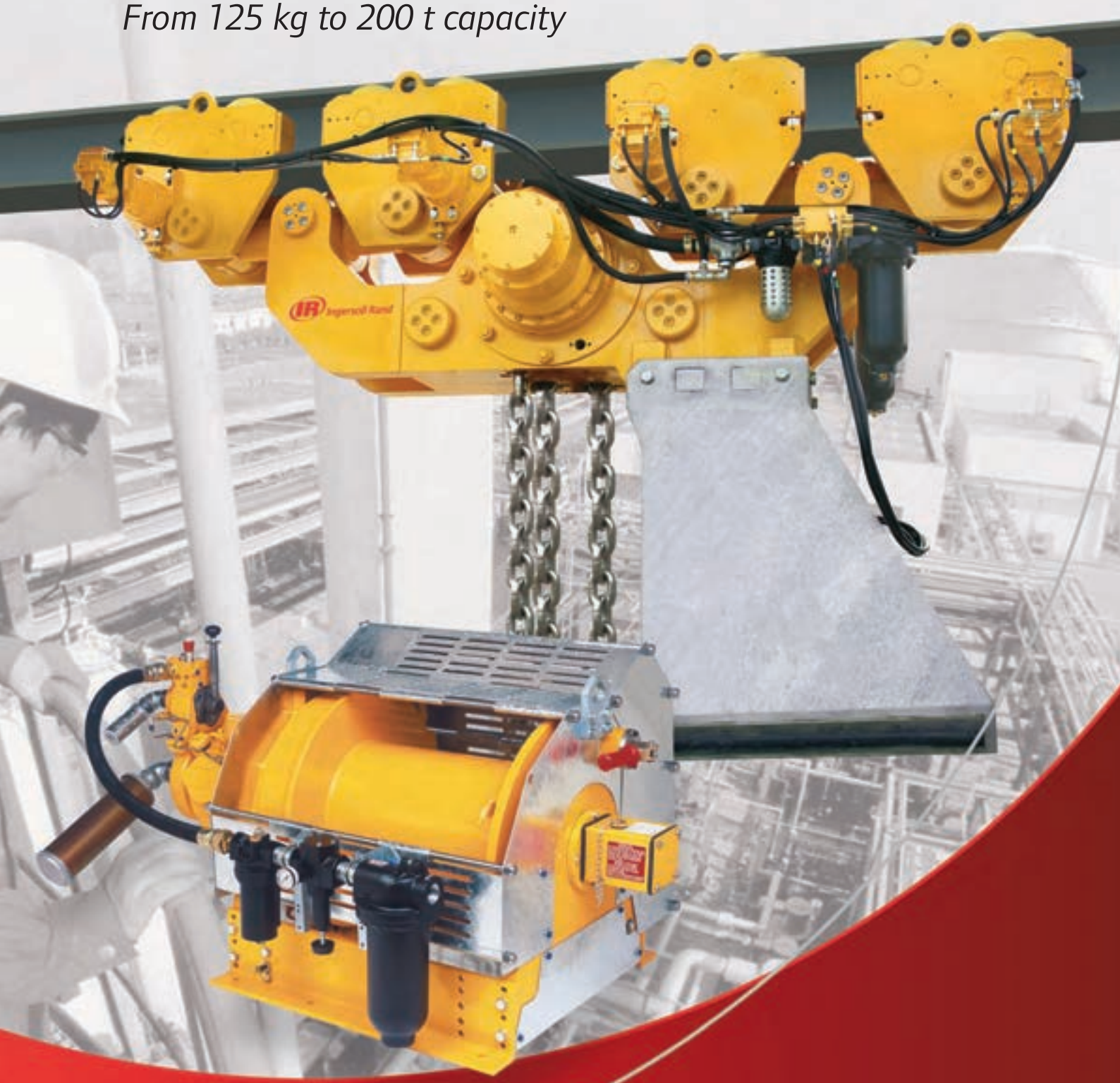

Air Winches & Hoists

The most comprehensive range of Air Winches, Air Chain Hoists and BOP Handling Systems on the market – 0.125 t to 200 t capacity. Setting the standards in winch and hoist technology, our lifting equipment are known throughout the Heavy Industry, the Mining and Tunneling Industry, the Public Works and the Offshore Drilling Industry for their reliability and safety.

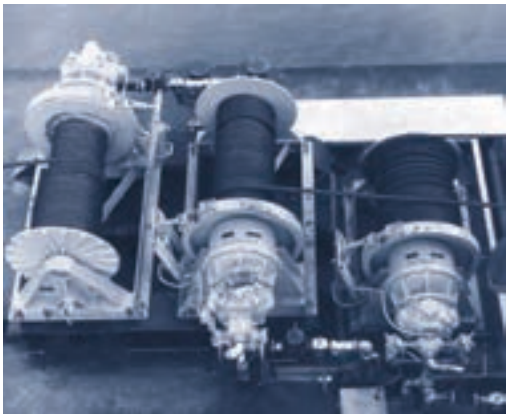
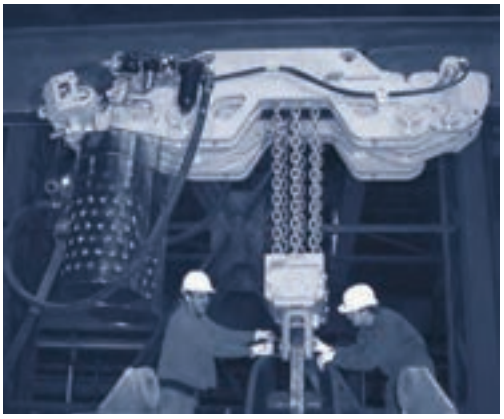

Air Winches & Hoists
Table of Contents

Air Winches – 150 kg to 10 t

Air Hoists – 125 kg to 100 t

BOP Handling Systems
25 t to 200 t

Manual Equipment
450 kg to 20 t

Liftstar® & Pullstar® Air Winches..... 5

LIFTSTAR® lifting air winches..... 7
PULLSTAR® pulling air winches..... 8
LS2-150RLP dedicated ManRider™..... 12

FA Infinity™ Air Winches..... 14

Utility Air Winches..... 15
Guideline and Podline Air Winches 17
Dual Rated Offshore ManRider™ Air Winches..... 18
FA150KGi-MR Dedicated ManRider™ 24

CLK & MLK Air Chain Hoists..... 31

Hook & Trolley Mount Hoists..... 32

Liftchain® Air Chain Hoists..... 34

Hook-Mount Configuration 35
Trolley-Mount Configuration 36
Low-Headroom Configuration 37
"Miner" Series 38

BOP Handling Systems 48

BS Series..... 50
BHS Series 56

Manual Equipment 61

L5H and SLB Manual Lever Hoists..... 62
VL2 Manual Hand Chain Hoists 63
SMB Manual Chain hoists and P & C Pullers 64
PT & GT Series Manual Trolleys..... 65

Additional Information..... 66

Winch Check List 66
Hoist Check List..... 67

Air Winches

The Ingersoll Rand line of air winches combines the best ideas and innovations resulting from over 200 years of experience in solving the most challenging lifting, pulling and positioning applications in the world's toughest industries.

Our air winches are manufactured in either Douai, France (gear type motor winches) or Kent, Washington, USA (piston type motor winches).

Enjoy the wide selection offered by these two lines and choose the model that best fits your application.

Ingersoll Rand

Liftstar® & Pullstar® Series Air Winches

0.15 - 10 t Load Capacity

Designed to work in difficult environments, these winches feature a low maintenance, highly reliable gear motor with high torque output that translates into smooth starts and stops. Their rugged and compact design makes them ready to take on your most challenging applications.

- **LIFTSTAR® (LS) models are designed for lifting applications with a 5:1 design factor at rated capacity.**
- **PULLSTAR® (PS) models are designed for pulling applications with a 3.5:1 design factor. They come standard with a drum disengaging clutch for free spooling unloaded wire rope.**

Reliable gear motor

- Its unique design with only two moving parts makes it ideal for severe applications in hot, cold, dusty, dirty, explosive and wet conditions.
- Less sensitive than other motors to long storage period or long period with no use.
- Virtually maintenance free and reduced downtimes.

Rugged construction

- Originally designed for the mining industry, the LS and PS winches are very robust and durable.
- Cast iron and steel construction.

Meets worldwide standards

- European standards FEM 9.511 and FEM 1001 for lifting.
- U.S. standard ASME/ANSI B30.7.
- Duty rating FEM 1Bm / ISO M3.

Gear Motor

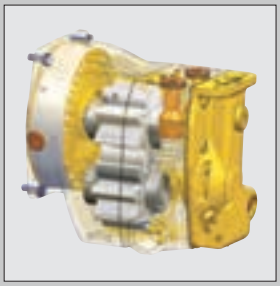

Features

- Light weight and compact design. Easy to carry.
- Robust steel construction.
- Automatic self-adjusting disc brake.
- Reliable gear type air motor in composite material.
- High efficiency planetary gear box.
- Flameproof by nature.
- Low noise level, quiet operation.
- Variable speed and precise positioning though direct control lever with "lift & shift" system with automatic return to neutral position or through progressive remote pendent.
- Declutchable drum on Pullstar® haulage versions for free spooling.
- Individually load tested before shipment – Delivered with manufacturer's test certificate.

LS2000R-L-G

CE marked models are compliant with the latest European machinery directive No 2006/42/EC and the European standard for power driven winches EN 14492-1. These models include as standard the following safety features: Drum guard — Emergency stop with main air shut-off valve as per EN 418. — Overload protection (LS models only) — Upper / lower limit switches (LS models only) — CE declaration of conformity.

Liftstar® and Pullstar® winches are, by design, particularly suitable for use in potentially explosive atmospheres, unlike electric winches. They are classified as standard as equipment category 2 for applications in zone 1 and 2 (as per ATEX 94/9/CE directive for surface industry). ATEX marking: **Ex II 2 GD c IIB 135°C X**. For the mining industry they can be fitted with an optional package to comply with requirements of equipment category M2 (consult us).

Liftstar® & Pullstar® Series Air Winches

0.15 - 10 t Load Capacity

LIFTSTAR® Lifting Series

LIFTSTAR® winches are designed with a 5:1 minimum safety factor at rated capacity.

- LIFTSTAR® winch always lifts its rated capacity at any layers of rope.
- LIFTSTAR® winch is designed so that the line speed remains constant on all layers when lifting its nominal load.
- The drums are generously dimensioned to obtain a minimum drum to rope diameter of 18:1 to avoid excessive bending of the wire rope thus increasing its life time.
- The rope storage capacities correspond to the maximum length of rope which can theoretically be stored onto the drum (calculated with wire rope tightly wound at full drum).
- The rated "working" rope capacity leaves a free space of 1.5 times the nominal rope diameter from the top of the drum flanges (as per the European standard EN 14192-1). This helps preventing the wire rope from running off the drum flanges during operation.

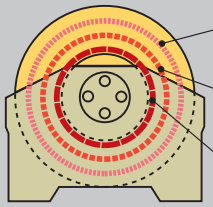

** On LIFTSTAR® winches the lifting speed with rated load is constant at all layers.*

PULLSTAR® Pulling Series

PULLSTAR® winches are designed with a 3.5:1 minimum safety factor at rated capacity.

- The rated capacity of the PULLSTAR® winches is calculated at the lowest rope layer on the drum. It corresponds to the maximum pulling force allowed. Refer to detailed curves on page 8 to get corresponding pulls / speeds at different layers.
- Pulling winches are intended for use on horizontal surfaces with no or insubstantial inclination.
- PULLSTAR® are fitted as standard with a free spooling clutch for rapid manual rope unwinding. The manual clutch is secured against unintended operation.

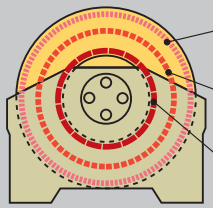

LS2-600R-L-CE

PS2400R-L-E

PS10000R-L

LIFTSTAR® Lifting Air Winches

Reliable and safe, this modern range of winches is designed for harsh environments. They can be equipped with many options for effective adaptation to your application
(see pages 9 and 10 for details).

See dimensions on page 11.

LS2-600R-L-CE

LS1500RGC-L-CE

LS5000RGC-L-CE

Specifications at 6.3 bar dynamic pressure (when winch is running) — Working pressure range 5 to 7 bar.
As per European standard EN 14492-1 – Group of mechanism as per FEM 1Bm / ISO M3.

Model number	Rated capacity at TOP LAYER (kg)	LIFTING SPEED AT RATED LOAD at top rope layer (m/min)	at lowest rope layer (m/min)	Rated number of layers (1)	Air consumption with rated load (m^3/min)	Sound level as per EN 14492-1 dB(A)	Net weight (kg)
LS Portable Series – Lifting Ratings at 5:1 Design Factor							
LS2-300R	300	40	40	7	4	92	42
LS2-300RGC	300	40	40	7	4	92	49
LS2-600R	600	20	20	5	4	92	42
LS2-600RGC	600	20	20	5	4	92	49
LS-1500R	1 500	7	7	3	5	88	67
LS-1500RGC	1 500	7	7	3	5	85	79
LS Heavy Series – Lifting Ratings at 5:1 Design Factor							
LS2000R	2 000	20	20	5	10	95	230
LS2000RGC	2 000	20	20	4	10	95	283
LS5000R	5 000	10	10	6	10	87	645
LS5000RGC	5 000	10	10	6	10	87	760

(1) Measured with recommended rope diameter (see table below).

Rope capacity with recommended rope diameter
For storage capacities with other rope diameters, use our "drum storage calculator" at the following web address:
http://www.ingersollrandproducts.com/lifting/winches/drum.htm

Model number	Minimum rope breaking force (kN)	Recommended rope diameter (mm)	Cumulated working rope capacities in meters (2) with RECOMMENDED ROPE DIAMETER Layer 1	Layer 2	Layer 3	Layer 4	Layer 5	Layer 6	Layer 7	Max. rope storage capacity (m)
LS Portable Series – Lifting Ratings at 5:1 Design Factor										
LS2-300R	15	5	12	26	41	57	74	92	110	150
LS2-300RGC	15	5	26	54	85	117	152	188	226	307
LS2-600R	30	6.5	9	20	32	45	58	—	—	89
LS2-600RGC	30	6.5	19	42	66	93	121	—	—	183
LS-1500R	75	10	8	19	30	—	—	—	—	57
LS-1500RGC	75	10	18	40	65	—	—	—	—	120
LS Heavy Series – Lifting Ratings at 5:1 Design Factor										
LS2000R	100	13	17	36	57	79	103	—	—	156
LS2000RGC	100	13	31	65	102	142	—	—	—	230
LS5000R	250	19	21	44	69	96	125	156	—	224
LS5000RGC	250	19	44	92	145	202	263	329	—	473

(2) As per EN 14492-1, the working rope capacity leaves a free space of at least 1.5 times the nominal rope diameter from the top of the drum flanges.

PULLSTAR® Pulling Air Winches

Intended for use on horizontal surfaces with no or insubstantial inclination, the PULLSTAR® winches are fitted as standard with a free spooling clutch for rapid manual rope unwinding.

See dimensions on page 11.

PS2-1000R-PH5M-E

PS2400RGC-L-E

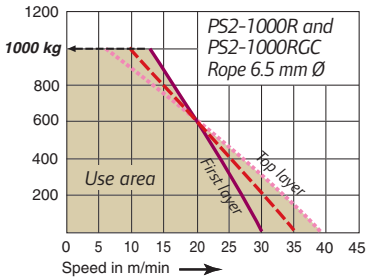

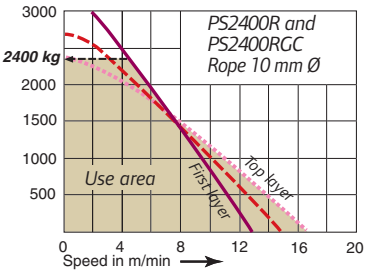

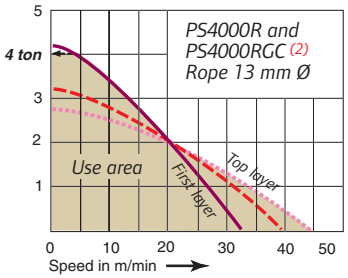

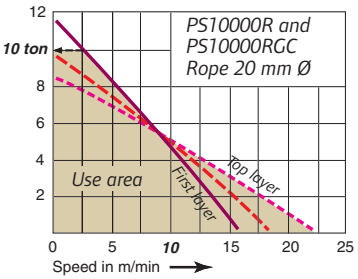

Specifications at 6.3 bar dynamic pressure – Working pressure range 5 to 7 bar.
As per European standard EN 14492-1 – Group of mechanism as per FEM 1Bm / ISO M3.

Model number	Pulling force: Lowest / top layer (kg)	Rated number of layers (1)	Air consumption with rated load (m^3/min)	Sound level as per EN 14492-1 dB(A)	Net weight (kg)
PS Portable Series – Pulling Ratings at 3.5:1 Design Factor					
PS2-1000R	1 000 / 800	5	4	92	41
PS2-1000RGC	1 000 / 800	5	4	92	47
PS2400R	2 400 / 2 000	3	5	88	62
PS2400RGC	2 400 / 2 000	3	5	85	76
PS Heavy Series – Pulling Ratings at 3.5:1 Design Factor					
PS4000R	4 000 / 2 500	5	12	95	225
PS4000RGC	3 600 / 2 500 (2)	4	12	95	278
PS10000R	1 0000 / 8 000	6	12	87	640
PS10000RGC	1 0000 / 8 000	6	12	87	755

(1) Measured with recommended rope diameter (see table below).
(2) For PS4000RGC, line pulls are reduced by 10% and line speeds are increased by 10%.

Rope capacity with recommended rope diameter
For storage capacities with other rope diameters, use our "drum storage calculator" at the following web address:
http://www.ingersollrandproducts.com/lifting/winches/drum.htm

Model number	Minimum rope breaking force (kN)	Recommended rope diameter (mm)	Cumulated working rope capacities in meters (3) with RECOMMENDED ROPE DIAMETER						Max. rope storage capacity (m)
			Layer 1	Layer 2	Layer 3	Layer 4	Layer 5	Layer 6	
PS Portable Series – Pulling Ratings at 3.5:1 Design Factor									
PS2-1000R	35	6.5	9	20	32	45	58	—	89
PS2-1000RGC	35	6.5	19	42	66	93	121	—	183
PS2400R	84	10	8	19	30	—	—	—	57
PS2400RGC	84	10	18	40	65	—	—	—	120
PS Heavy Series – Pulling Ratings at 3.5:1 Design Factor									
PS4000R	140	13	17	36	57	79	103	—	156
PS4000RGC	140	13	31	65	102	142	—	—	230
PS10000R	350	19	21	44	69	96	125	156	224
PS10000RGC	350	19	44	92	145	202	263	329	473

(3) As per EN 14492-1, the working rope capacity leaves a free space of at least 1.5 times the nominal rope diameter from the top of the drum flanges.

Main options for both Portable and Heavy Series

Drum guard on PS2400R

Limit switches on LS5000R

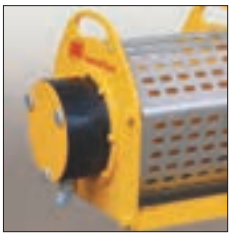
Limit switches on LS600R

LS5000R with emergency stop

LS2000R with overload protection

PHS control on PS2-1000R

Drum guard
Prevents the operator from inadvertent contact with winch moving parts – Delivered as standard on all CE compliant versions.

Top and bottom limit switches
Automatically stops the winch when the travel exceeds the pre-determined working distance. Enclosed mechanism is environmentally protected. Needs to be adjusted on site as per customer configuration/application - Delivered as standard on Liftstar® lifting Series in CE compliant version.

Emergency stop
Allows the operator to quickly and safely stop the winch in case of an emergency situation. Pressing the e-stop button closes a shut-off valve which stops the main air from entering into the motor, brake is applied automatically - Delivered as standard on all CE compliant versions.

Pneumatic overload protection
Automatically stops the winch in case of overload exceeding 125 – 130% of safe working load and brake is automatically activated - Delivered as standard on Liftstar® winches in CE compliant version.

Remote Control
The LS and PS Series can be remote controlled by PHS progressive remote pilot pendent up to 20 meters. This pendent is available in both alloy and cast iron versions and can include an emergency stop.

Main options for Heavy Series only

Rope press roller assembly
Presses the wire rope onto the drum to improve winding, especially at no load conditions. Composite rollers ride on galvanised steel guides for maximum wear and corrosion resistance.

Grooved drum
Ensures better rope spooling than plain drum. Allows a greater rope fleet angle up to 2°.

Drum auto brake with skid frame or drum auto brake plus disc brake with skid frame
A drum auto brake is available instead of the internal disc brake or as a second brake. (comes with a skid frame). The auto drum brake works independently from the internal disc brake for extra safety.

Drum brake with skid frame on LS2000R

Spooling device on LS5000R

Automatic spooling device
Automatically guides back and forth the rope across the drum to ensure proper rope spooling when rope fleet angle exceeds 2°. Avoids dangerous rope built-up situations.

LIFTSTAR® and PULLSTAR® Series Ordering Menu

To order your winch, specify complete model number code as shown below:

- **LIFTSTAR® lifting winches in CE version** are fitted as standard with: drum guard — pneumatic overload protection device — emergency stop valve (main air shut-off) — rotary limit switches (top and bottom).
- **PULLSTAR® pulling winches in CE version** are fitted as standard with drum guard and emergency stop valve (main air shut-off).

LIFTSTAR® and PULLSTAR® Portable Series:

L S 1 5 0 0 R ● G C – L ● ● – P J 1 2 – C E

Series and capacity	ATEX compliance	Drum	Control type	Control length	Options
LS2-300R LIFTSTAR® 300 kg **LS2-600R** LIFTSTAR® 600 kg **LS1500R** LIFTSTAR® 1 500 kg **PS2-1000R** PULLSTAR® 1 000 kg **PS2400R** PULLSTAR® 2 400 kg	No letter = As standard - ATEX compliance for group II, surface industry **M** = ATEX compliance package for group I, mining industry (on request) - only for LS1500R and PS2400R	No letter = Standard **GC** Long drum	**L** Lever control **PH** Alloy precision PHS pendent **PHR** Cast iron precision PHS pendent	**XM** Control length in metres e.g. 5M *(only when with pendent control)*	**CM** Low temperature design (-20°C DNV). Includes 3.1 material traceability certificates. **G** Drum guard for non-CE models. **H** High temp. motor (60° to 85°C). **J** Airline accessories **(1)** **M** 3.1 material traceability certificates as per EN 10204 on main load bearing parts. **P** Marine paint finish. **QZ** Offshore paint including sandblasting. **W1** ABS witness test. **W2** DNV witness test. **W3** LRS witness test. **W4** Client witness of load test. **Compliance with the European machinery directive** **-CE** LIFTSTAR® (LS) lifting models. **-E** For PULLSTAR® (PS) pulling models.

LIFTSTAR® and PULLSTAR® Heavy Series:

L S 2 0 0 0 R ● G C – P H 5 M – C K P – C E

Series and capacity	ATEX compliance	Drum	Control type	Control length	Options
LS2000R LIFTSTAR® 2 000 kg **LS5000R** LIFTSTAR® 5 000 kg **PS4000R** PULLSTAR® 4 000 kg **PS10000R** PULLSTAR® 10 000 kg	No letter = As std. - ATEX compliance for group II - surface industry **M** = ATEX compliance package for group I - mining industry (on request).	No letter = Standard **GC** Long drum	**L** Lever control **PH** Alloy precision PHS pendent **PHR** Cast iron precision PHS pendent	**XM** Control length in metres e.g. 5M *(only when with pendent control)*	**CM** Low temperature design (-20°C DNV). Includes 3.1 material traceability certificates. **FF** Skid frame + auto drum + disc brakes **FK** Drum auto brake and skid (no disc) **G** Drum guard for non-CE models. **H** High temp. motor (60° to 85°C) **J** Airline accessories **(1)** **K** Skid frame **L** Automatic spooling device **M** 3.1 material traceability certificates as per EN 10204 on main load bearing parts **P** Marine paint finish **QZ** Offshore paint including sandblasting **R** Press roller **W1** ABS witness test **W2** DNV witness test **W3** LRS witness test **W4** Client witness of load test **16** Drum grooving (number = rope diameter in mm) **Compliance with the European machinery directive** **-CE** For LIFTSTAR® (LS) lifting models. **-E** For PULLSTAR® (PS) pulling models.

(1) Add 1 for filter, 2 for lubricator, 3 for regulator (e.g. J12). For protection during shipment and due to the wide range of installation variables, the airline accessories are shipped loose for client installation.

Ingersoll Rand strongly recommends using drum guards with all winches to prevent inadvertent contact with winch moving parts.

LIFTSTAR® and PULLSTAR® Series – Dimensions in mm

Model no.	A	B	C
CE Models			
LS2-300R-CE, LS2-600R-CE	155	140	461
LS2-300RGC-CE, LS2- 600RGC-CE	311	296	617
PS2-1000R-E	155	140	427
PS2- 1000RGC-E	311	296	583
Non CE Models			
LS2-300R, LS2-600R	155	140	369
LS2-300RGC, LS2-600RGC	311	296	516
PS2-1000R	155	140	392
PS2-1000RGC	311	296	548

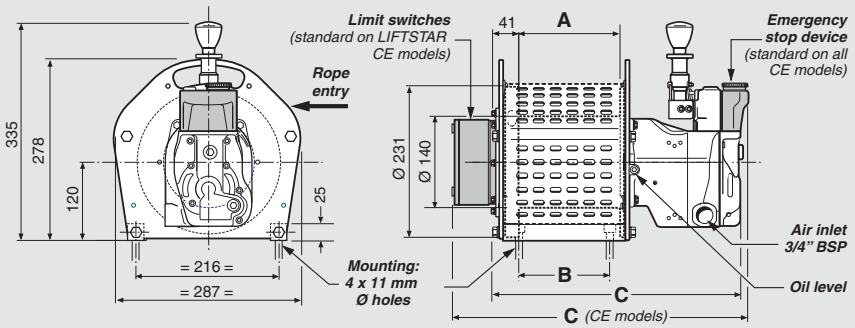

Model no.	A	B	C
CE Models			
LS1500R-CE	180	248	563
LS1500RGC-CE	360	428	743
PS2400R-E	180	248	495
PS2400RGC-E	360	428	675
Non CE Models			
LS1500R	180	248	441
LS1500RGC	360	428	621
PS2400R	180	248	509
PS2400RGC	360	428	689

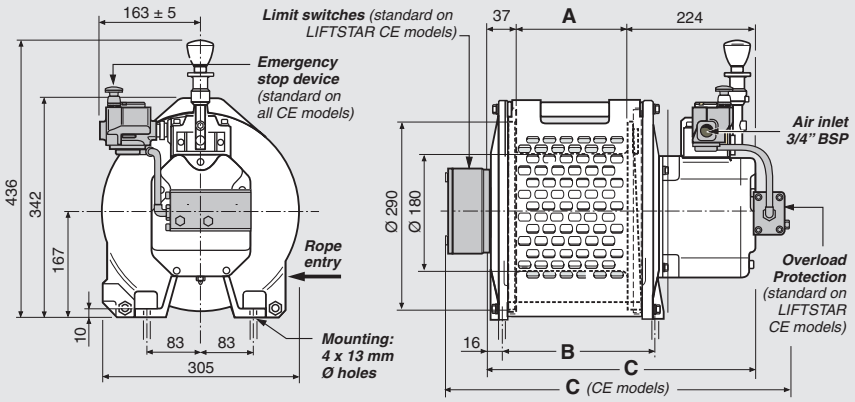

Model no.	A	B	C
CE Models			
LS2000R-CE	302	449	952
LS2000RGC-CE	485	634	1137
PS4000R-E	302	449	794
PS4000RGC-E	485	634	979
Non CE Models			
LS2000R	302	449	719
LS2000RGC	485	634	904
PS4000R	302	449	719
PS4000RGC	485	634	904

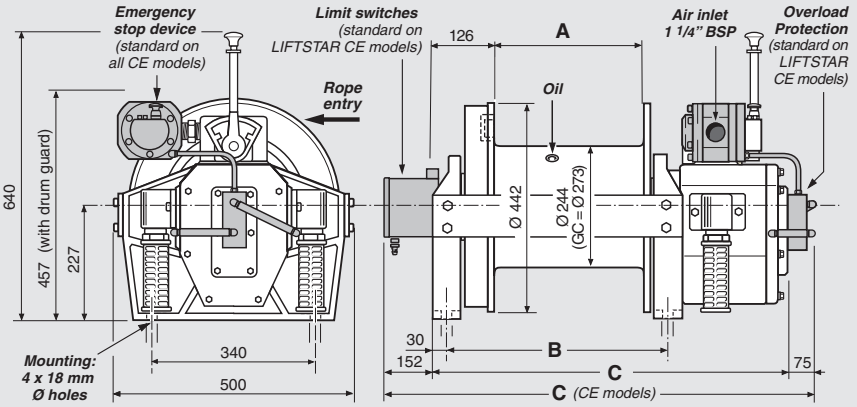

Model no.	A	B	C
CE Models			
LS5000R-CE	355	580	1090
LS5000RGC-CE	728	953	1463
PS10000R-E	355	580	979
PS10000RGC-E	728	953	1352
Non CE Models			
LS5000R	355	580	904
LS5000RGC	728	953	1277
PS10000R	355	580	904
PS10000RGC	728	953	1277

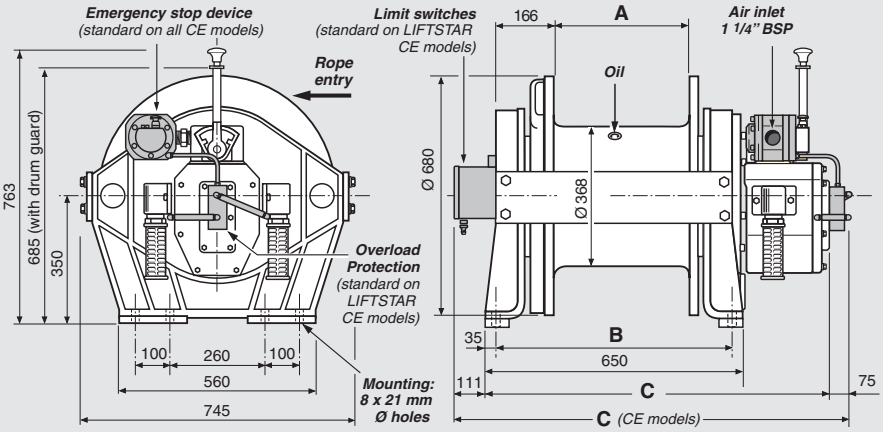

Dimensions are subject to change without notice. Please contact Client Services for certified prints.

LS2-150RLP Dedicated ManRider™

The LS2-150RLP pneumatic ManRiding winch is specially designed for safe and reliable personnel lifting operations by means of a safety harness on offshore rigs and platforms in a heavy duty and critical offshore working environment.
It is designed to meet the latest NPD and European machinery directives and is type approved by DNV.
It is delivered with the CE mark and an EC declaration of conformity.

LS2-150RLP-L-E

Features:

- Design factor 10:1 on main load bearing parts.
- Gear type air motor – high starting torque – good spotting capability.
- High efficiency planetary gear box, totally enclosed within the drum.
- Internal automatic multi-disc brake, fully enclosed, plus external automatic drum band brake. The band brake is manufactured from stainless steel for superior corrosion protection. In case of power failure, both the band brake and the disc brake will automatically apply.
- Overload protection, acting at 130% of SWL with automatic activation of brakes.
- Emergency stop device acting directly on the main air supply.
- Slack wire detector – automatically stops the winch from paying out in case of slack wire - designed for vertical rope entry. Roller in composite material.
- Top and Bottom limit switches – stops the winch when the travel exceeds the pre-determined working distance.
- Assisting spooling device – presses the wire rope onto the drum to improve winding, specially at no load condition.
- Rugged stainless steel drum guard – meets stringent European standard EN953.
- Helical grooved drum – allows greater fleet angle up to 2° – designed for 10 mm wire rope.
- Variable speed control with "press and shift" lever. Prevents accidental throttle movements.
- Pre-equipped emergency device – allows both lifting and lowering of the winch in case of main power failure. Connects to a nitrogen bottle (nitrogen bottle as an option).
- FRL package mounted directly on the operator side of the winch.
- Marine paint for corrosion protection.
- Design temperature = -20°C.
- Suitable for zone 1 and 2 as per ATEX directive 94/9/EC – FEM Classification 4m.

Specifications at 6.3 bar dynamic pressure (when winch is running) – **As per DNV regulations**

Model number	Rated capacity at top layer (kg)	LIFTING SPEED AT RATED LOAD at top rope layer (m/min)	at lowest rope layer (m/min)	Rated number of layers	Air consumption with rated load (m^3/min)	Sound level as per EN 14492-1 dB(A)	Weight without rope (kg)	ATEX marking Ex II 2 GD c IIB 135°C X
Lifting Ratings at 10:1 Design Factor								
LS2-150RLP	150	30	30	2	2.5	89	210	√

Rope capacity in meters
For personnel lifting winches, the working rope capacity corresponds to the max. storage capacity les 2.5 layers (i.e. less 25 mm for 10 mm dia. rope)

Model number	Minimum rope breaking force (kN)	Recommended rope diameter (mm)	Cumulated working rope capacities in meters with RECOMMENDED ROPE DIAMETER Layer 1	Layer 2	Maximum rope storage capacity (m)	Number of layers
LS2-150RLP	15	10	24	54	154	5

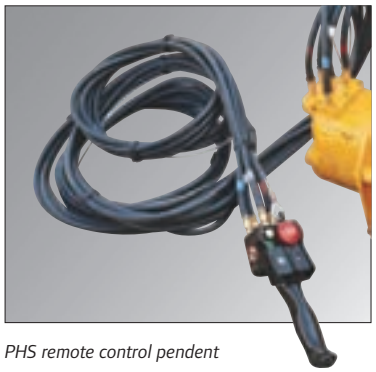

PHS remote control pendent

Remote control option

The LS2-150RLP can be remote controlled by progressive pilot pendent up to 20 m. This pendent is available in both alloy and cast iron and includes the emergency stop.

Automatic spooling device

Automatic spooling device option

It automatically guides back and forth the rope across the drum to ensure proper rope spooling when rope fleet angle exceeds 2°.

Ordering menu

To order your winch, specify complete model number code as shown below:

LS2-150RLP – L – ●● – MQZR – E

Series	Control type	Control length	Options	CE conformity
LS2-150RLP LIFTSTAR® 150 kg Manrider™	**L** Lever control **PH** Alloy precision PHS pendent **PHR** Cast iron precision PHS pendent	**XM** Control length in metres e.g. 5M *(only when with pendent control – Max. length 20 m)*	**L** Automatic spooling device **M** Material traceability certificate as per EN 10204 3.1 on main load bearing parts. **N5** (1) DNV certification (Built under DNV survey) **QZ** Offshore paint including sandblasting. **R** Nitrogen bottle (200 bar/10 litres) with regulator (2). **W1** ABS witness test. **W2** DNV witness test. **W3** LRS witness test. **W4** Client witness of load test	**-E** Compliance with the European machinery directive

(1) Includes option codes "M" and "W2". The DNV certification includes final inspection with performance / load testing, DNV "product certificate" attesting the compliance of the unit as per the DNV type approval requirements, review of the fabrication documentation and supply of 3.1 Material traceability certificates.

(2) Allows a 50 meter lowering distance or a 25 m lifting distance.

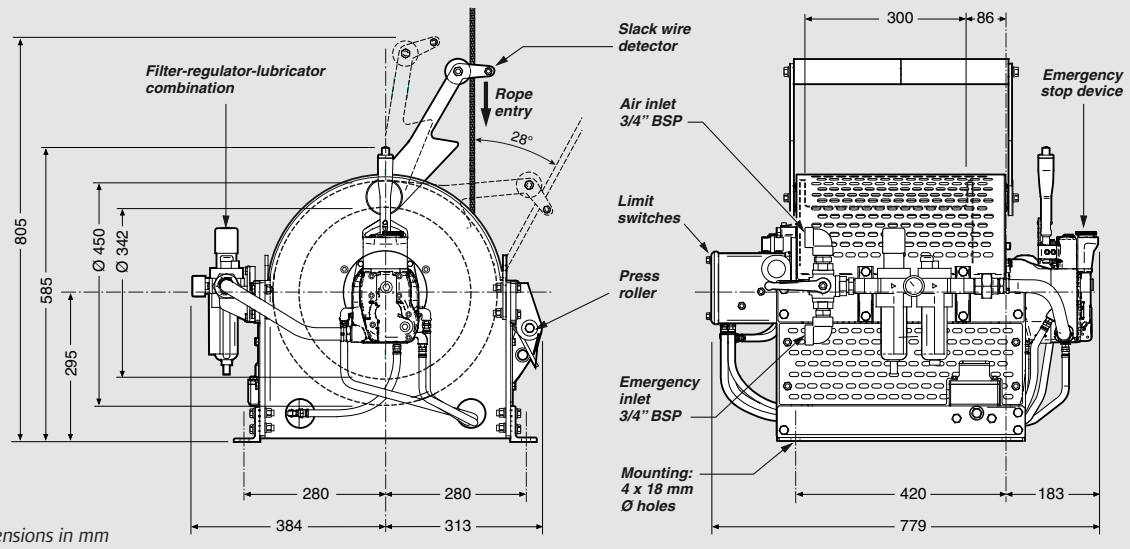

Dimensions in mm

Dimensions are subject to change without notice. Please contact Client Services for certified prints.

FA Infinity™ Series Air Winches

0.15 - 10 t Load Capacity

Setting the standards in winch technology with time savings, and enhanced safety, Ingersoll Rand FA Infinity™ air winches are known throughout the world for their rugged dependability and quality in the harsh environments.

Featuring heavy duty piston motors, internal gear boxes and fabricated steel frames, FA Infinity™ winches can be made in a variety of configurations to suit particular applications.

Features

Rugged and compact design

- 5:1 design factor at rated load.
- Minimum 18:1 drum diameter to wire rope diameter ratio reduces wire rope wear.
- Compact gearbox-in-drum design.
- Group of mechanism as per FEM: 5m.
- Standard design temperature range is 0°C through 60°C.
- "Lift to shift" winch mounted lever throttle.
- Lifting lugs designed for lifting weight of winch plus full drum of wire rope.

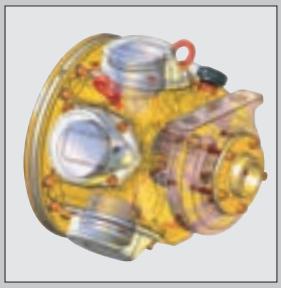

Powerful radial piston air motor

Piston Motor

- Positive starting torque.
- Variable speed control. Precision spotting control at slow speeds.
- Superior reliability in harsh environments.
- Internal splash lubrication.

Multiple brake configurations

- Manual drum brake standard (FA10i auto disc is standard).
- Optional auto drum brake and /or auto disc available.
- Enclosed automatic oil bath "wet" disc brake is fully sealed against salt spray, dirt or moisture and provides trouble-free operation over thousands of lifting cycles.

Note: Ingersoll Rand recommends automatic brakes when winches are used for lifting.

FA5i-24AK1J1235L-CE

Meets worldwide standards

- European standards FEM 5M for lifting.
- U.S. standard ANSI / ASME B30.7
- Duty rating FEM 1Bm / ISO M3.
- Most models either carry or have pending Design Approval by Det Norske Veritas (DNV) and/or the American Bureau of Shipping (ABS).

FA Infinity™ C.E. marked models are compliant with the latest European machinery directive No 2006/42/EC and the European standard for power driven winches EN 14492-1. These models include as standard the following safety features:
Drum guard — Overload protection — Emergency stop with main air shut-off valve as per EN 418 — Upper / lower limit switches — Automatic brake — Regulator — Exhaust muffler — CE declaration of conformity.

FA Infinity™ winches are, by design, particularly suitable for use in potentially explosive atmospheres, unlike electric winches.
They are classified as standard as equipment category 2 for applications in zone 1 and 2 (as per ATEX 94/9/CE directive for surface industry).
ATEX marking: **Ex II 2 GD c IIB 135°C X**.

Utility Air Winches

Designed for offshore and harsh industrial environments the robust FA Infinity™ utility winches are available with several drum widths and can be equipped with many options for effective adaptation to your application (see pages 20 to 23 for details).

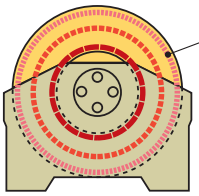

Top layer rating *
(i.e. drum flange diameter less 1.5 times the rope diameter)

** FA Infinity™ winches will always lift the rated load at any layer of wire rope)*

FA7i-24AK1G

Specifications at 6.3 bar dynamic pressure (when winch is running) — Working pressure range 5 to 7 bar.
As per European standard EN 14492-1 – Group of mechanism as per FEM 5M

Model number	Rated capacity at TOP LAYER (kg)	LIFTING SPEED AT RATED LOAD at top rope layer (m/min)	at lowest rope layer (m/min)	Stall pull (kg)	RATED DRUM CAPACITY/ Rope diameter (1)	Air consumption with rated load (m3/min)	Sound level as per EN 14492-1 dB(A)	Net weight (2) (kg)
FA Infinity™ Utility Air Winches / Standard Flange — Lifting Ratings at 5:1 Design Factor								
FA2i-12...	2 000	16	17	4 150	143 m / Ø 13 mm	8	87	346
FA2i-16...					193 m / Ø 13 mm			359
FA2i-20...					248 m / Ø 13 mm			372
FA2i-24...					298 m / Ø 13 mm			386
FA2.5i-8...	2270	40	39	4 670	64 m / Ø 16 mm	20	97	432
FA2.5i-12...					99 m / Ø 16 mm			442
FA2.5i-16...					134 m / Ø 16 mm			455
FA2.5i-20...					168 m / Ø 16 mm			468
FA2.5i-24...					203 m / Ø 16 mm			481
FA5i-16...	5 000	16	16	10 725	188 m / Ø 19 mm	20	97	797
FA5i-20...					237 m / Ø 19 mm			823
FA5i-24...					287 m / Ø 19 mm			849
FA5i-30...					361 m / Ø 19 mm			888
FA5i-36...					435 m / Ø 19 mm			927
FA7i-20...	7 000	12	11	16 305	221 m / Ø 22 mm	21	97	963
FA7i-24...					268 m / Ø 22 mm			1000
FA7i-30...					337 m / Ø 22 mm			1057
FA7i-36...					407 m / Ø 22 mm			1113
FA7i-42...					477 m / Ø 22 mm			1170
FA10i-24...	10 000	7	11	17 525	317 m / Ø 28 mm	23	101	1451
FA10i-30...					400 m / Ø 28 mm			1523
FA10i-36...					484 m / Ø 28 mm			1594
FA10i-40...					539 m / Ø 28 mm			1641
FA Infinity™ Utility Air Winches / Tall Flange — Lifting Ratings at 5:1 Design Factor								
FA5Ti-16...	3 820	21	17	10 725	460 m / Ø 19 mm	20	97	925
FA5Ti-20...					580 m / Ø 19 mm			950
FA5Ti-24...					701 m / Ø 19 mm			977
FA5Ti-30...					882 m / Ø 19 mm			1016
FA5Ti-36...					1063 m / Ø 19 mm			1054
FA7Ti-20...	5 720	15	12	16 305	427 m / Ø 22 mm	21	97	1022
FA7Ti-24...					517 m / Ø 22 mm			1059
FA7Ti-30...					651 m / Ø 22 mm			1116
FA7Ti-36...					785 m / Ø 22 mm			1172
FA7Ti-42...					919 m / Ø 22 mm			1229

(1) Recommended rope diameter – Number of layers and maximum storage rope capacities on following page.
(2) For models with automatic disc brake and lever control.

FA Infinity™ Series Air Winches
0.15 - 10 t Load Capacity

Utility Air Winches

Rope capacity with recommended rope diameter

For storage capacities with other rope diameters, use our "drum storage calculator" at the following web address:
http://www.ingersollrandproducts.com/lifting/winches/drum.htm

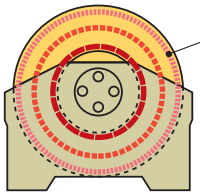

Top layer rating *
(i.e. drum flange diameter less 1.5 times the rope diameter)

The working rope capacity leaves a free space of at least 1.5 times the nominal rope diameter from the top of the drum flanges (EN 14492-1 standard)

Model number	Minimum rope breaking force (kN)	Recommended rope diameter (mm)	Cumulated working rope capacities in meters (1) with RECOMMENDED ROPE DIAMETER												Max. rope storage capacity (m)
			Layer 1	2	3	4	5	6	7	8	9	10	11	12	
FA Infinity™ Utility Air Winches / Standard Flanges — Lifting Ratings at 5:1 Design Factor															
FA2i-12...	10 000	13	19	40	64	88	115	143	—	—	—	—	—	—	204
FA2i-16...			26	55	86	119	155	193	—	—	—	—	—	—	276
FA2i-20...			33	70	110	153	199	248	—	—	—	—	—	—	354
FA2i-24...			40	85	133	184	239	298	—	—	—	—	—	—	426
FA2.5i-8...	11350	16	10	22	35	49	64	—	—	—	—	—	—	—	80
FA2.5i-12...			16	34	54	75	99	—	—	—	—	—	—	—	124
FA2.5i-16...			22	46	73	102	134	—	—	—	—	—	—	—	167
FA2.5i-20...			27	58	92	129	168	—	—	—	—	—	—	—	211
FA2.5i-24...			33	70	111	156	203	—	—	—	—	—	—	—	255
FA5i-16...	25 000	19	25	53	83	116	151	188	—	—	—	—	—	—	269
FA5i-20...			32	67	105	146	190	237	—	—	—	—	—	—	340
FA5i-24...			39	81	127	177	230	287	—	—	—	—	—	—	411
FA5i-30...			49	102	160	223	290	361	—	—	—	—	—	—	517
FA5i-36...			59	123	193	268	349	435	—	—	—	—	—	—	623
FA7i-20...	35 000	22	29	62	97	136	177	221	—	—	—	—	—	—	319
FA7i-24...			35	75	118	164	214	268	—	—	—	—	—	—	385
FA7i-30...			45	94	149	207	270	337	—	—	—	—	—	—	485
FA7i-36...			54	114	179	250	326	407	—	—	—	—	—	—	585
FA7i-42...			63	134	210	293	381	477	—	—	—	—	—	—	685
FA10i-24...	50 000	28	34	73	115	160	209	261	317						376
FA10i-30...			44	92	145	202	264	330	400	—	—	—	—	—	475
FA10i-36...			53	111	175	244	319	399	484	—	—	—	—	—	574
FA10i-40...			59	124	195	273	356	444	539	—	—	—	—	—	640
FA Infinity™ Utility Air Winches / Tall Flanges — Lifting Ratings at 5:1 Design Factor															
FA5Ti-16...	19 100	19	25	53	83	116	151	188	227	269	313	360	408	460	569
FA5Ti-20...			32	67	105	146	190	237	287	340	396	454	516	580	718
FA5Ti-24...			39	81	127	177	230	287	347	411	478	549	623	701	867
FA5Ti-30...			49	102	160	223	290	361	437	517	601	690	784	882	1091
FA5Ti-36...			59	123	193	268	349	435	526	623	725	832	945	1063	1315
FA7Ti-20...	28 600	22	29	62	97	136	177	221	269	319	371	427	—	—	548
FA7Ti-24...			35	75	118	164	214	268	325	385	449	517	—	—	662
FA7Ti-30...			45	94	149	207	270	337	409	485	566	651	—	—	834
FA7Ti-36...			54	114	179	250	326	407	493	585	683	785	—	—	1006
FA7Ti-42...			63	134	210	293	381	477	578	685	799	919	—	—	1178

(1) As per EN 14492-1

See dimensions on pages 26 and 27.

Guideline and Podline Air Winches

As offshore oil drilling heads into deeper waters, Ingersoll Rand Guideline and Podline winches are prepared to follow. These specially configured versions of the FA7Ti tall flange air winch feature:

- Top layer ratings insure "lift at any layer" capability.
- 1067 mm drum flange height and length for maximum wire rope capacity. Other drum flange lengths are available.
- Marine 812 ("P" option) corrosion resistant marine finish paint.
- Locking dog, easy to operate, trouble free and maintenance friendly.
- Winch mounted throttle for precise load control.
- Internal oil bath, automatic disc brake, protected from the elements.

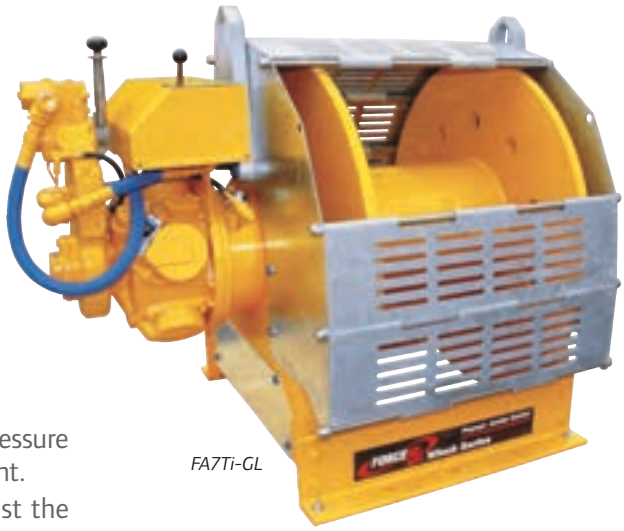

FA7Ti-GL

Specific to the FA7TiGL Guideline winch:

- A lower gear ratio and switching valve arrangement with pressure regulator preset for unmanned lowering of sub-sea equipment.
- In guideline mode, a pressure regulator can be set to adjust the tension.
- Simply flipping a lever switches the winch from utility to guideline mode. In this mode, the winch can be overhauled at speeds up to 28 m/min.

Guideline mode control

Locking dog

See dimensions on page 27.

Specifications at 6.3 bar dynamic pressure (when winch is running) — Working pressure range 5 to 7 bar.
As per European standard EN 14492-1 – Group of mechanism as per FEM 5M

Model number	Rated capacity at TOP LAYER (kg)	LIFTING SPEED AT RATED LOAD at top rope layer (m/min)	at lowest rope layer (m/min)	Stall pull (kg)	RATED DRUM CAPACITY/ Rope diameter (1)	Air consumption with rated load (m^3/min)	Sound level as per EN 14492-1 dB(A)	Net weight (kg)
Lifting Ratings at 5:1 Design Factor								
FA7Ti-GL42…	1540	46	48	4170	4556 m / Ø 13 mm	21	97	1352
FA7Ti-PL42…	4620	18	12	16300	2934 m / Ø 16 mm	21	97	1293

(1) With recommended rope diameter. See below for drum capacities with other rope diameters.

Rope capacity with recommended rope diameters

Model number	Minimum rope breaking force (kN)	Recommended rope diameter (mm)	Cumulated working rope capacities in meters (2) with RECOMMENDED ROPE DIAMETER Layer 1	2	3	4	5	6	Mid drum	Max. working capacity	Max. rope storage capacity (m)
Lifting Ratings at 5:1 Design Factor											
FA7Ti-GL42…	7 700	13	106	219	339	464	596	735	1878	4556 (25th layer)	4820
		16	87	180	280	386	498	616	1153	2934 (20th layer)	3147
		20	70	146	229	317	413	514	735	1707 (15th layer)	2041
		22	63	134	210	293	381	477	578	1462 (14th layer)	1613
FA7Ti-PL42…	23 100	13	106	219	339	464	596	735	1878	4556 (25th layer)	4820
		16	87	180	280	386	498	616	1153	2934 (20th layer)	3147
		20	70	146	229	317	413	514	735	1707 (15th layer)	2041
		22	63	134	210	293	381	477	578	1462 (14th layer)	1613

(2) As per EN 14492-1, the working rope capacity leaves a free space of at least 1.5 times the nominal rope diameter from the top of the drum flanges.

Dual Rated Offshore ManRider™ Air Winches

Ingersoll Rand's offering of dedicated and dual purpose (utility & personnel lifting) ManRider™ winches are known worldwide as the standard for meeting the toughest personnel lifting requirements in the industry. Most of these rugged, oilfield tough winches either carry or have pending design approval by Det Norske Veritas (DNV) and/or the American Bureau of Shipping (ABS). Fully type approved models to meet DNV - OS-E101 and ABS - CDS are available upon request. Infinity™ winches also meet UK HSE and PSA regulations for personnel lifting applications.

Meeting world standards

Certified to those standards. Drilling rigs and platforms are used all over the world and come under numerous and diverse regulations. Ingersoll Rand builds to regional and global specifications and our winches can be certified by Det Norske Veritas (DNV), and the American Bureau of Shipping (ABS).

Type approval

A comprehensive design review by a third party addresses intended service, applications, ratings, design calculations, load bearing components, product specifications, and service restrictions or limitations. Plant surveys verify quality control procedures. A Type Approval certificate is then issued for specific units.

FA2.5i-MR12MK1P-E.

Specifications for manriding applications at 6.3 bar dynamic pressure — Working pressure range 5 to 7 bar.
As per DNV regulations – Group of mechanism as per FEM 5M

Model number	Rated capacity at TOP LAYER (kg)	LIFTING SPEED AT RATED LOAD at top rope layer (m/min)	at lowest rope layer (m/min)	Stall pull (kg)	RATED DRUM CAPACITY/ Rope diameter (1)	Air consumption with rated load (m^3/min)	Sound level as per EN 14492-1 dB(A)	Net weight (kg)
Lifting Ratings at 8:1 Design Factor								
FA2i-MR12MK...	1445	23	21	4150	118 m / Ø 13 mm	8	87	375
FA2i-MR24MK...					242 m / Ø 13 mm			420
FA2.5i-MR12MK...	1445	53	44	4670	118 m / Ø 13 mm	20	97	529
FA2.5i-MR24MK...					242 m / Ø 13 mm			574
FA5i-MR16MK...	3120	23	19	10720	151 m / Ø 19 mm	20	97	845
FA5i-MR24MK...					230 m / Ø 19 mm			907

(1) With recommended rope diameter.

Rope capacity with recommended rope diameter / Manriding applications

For storage capacities with other rope diameters, use our "drum storage calculator" at the following web address:
http://www.ingersollrandproducts.com/lifting/winches/drum.htm

Model number	Minimum rope breaking force (kN)	Recommended rope diameter (mm)	Cumulated working rope capacities in meters (2) with RECOMMENDED ROPE DIAMETER Layer 1	2	3	4	5	Max. rope storage capacity (m)	Corresponding number of layers
FA2i-MR12MK...	11 560	13	20	42	65	91	118	210	8
FA2i-MR24MK...			41	86	135	187	242	430	8
FA2.5i-MR12MK...	11560	13	20	42	65	91	118	210	8
FA2.5i-MR24MK...			41	86	135	187	242	430	8
FA5i-MR16MK...	24 960	19	25	53	83	116	151	269	8
FA5i-MR24MK...			39	81	127	177	230	411	8

(2) As per D.N.V.

Specifications for utility applications at 6.3 bar dynamic pressure — Working pressure range 5 to 7 bar.
As per European standard EN 14492-1 – Group of mechanism as per FEM 5M

Model number	Rated capacity at TOP LAYER (kg)	LIFTING SPEED AT RATED LOAD at top rope layer (m/min)	at lowest rope layer (m/min)	Stall pull (kg)	RATED DRUM CAPACITY/ Rope diameter (3)	Air consumption with rated load (m3/min)	Sound level as per EN 14492-1 dB(A)	Net weight (kg)
Lifting Ratings at 5:1 Design Factor								
FA2i-MR12MK...	2000	16	17	4150	147 m / Ø 13 mm	8	87	375
FA2i-MR24MK...					301 m / Ø 13 mm			420
FA2.5i-MR12MK...	2270	40	39	4670	147 m / Ø 13 mm	20	97	529
FA2.5i-MR24MK...					301 m / Ø 13 mm			574
FA5i-MR16MK...	5000	16	16	10720	188 m / Ø 19 mm	20	97	845
FA5i-MR24MK...					287 m / Ø 19 mm			907

(3) With recommended rope diameter.

Rope capacity with recommended rope diameter / Utility applications
For storage capacities with other rope diameters, use our "drum storage calculator" at the following web address:
http://www.ingersollrandproducts.com/lifting/winches/drum.htm

Model number	Minimum rope breaking force (kN)	Recommended rope diameter (mm)	Cumulated working rope capacities in meters (4) with RECOMMENDED ROPE DIAMETER Layer 1	2	3	4	5	6	Max. rope storage capacity (m)	Corresponding number of layers
FA2i-MR12MK...	10 000	13	20	42	65	91	118	147	210	8
FA2i-MR24MK...			41	86	135	187	242	301	430	8
FA2.5i-MR12MK...	11350	13	20	42	65	91	118	147	210	8
FA2.5i-MR24MK...			41	86	135	187	242	301	430	8
FA5i-MR16MK...	25 000	19	25	53	83	116	151	188	269	8
FA5i-MR24MK...			39	81	127	177	230	287	411	8

(4) As per EN 14492-1.

See dimensions on page 28.

TIP:

What features make a winch a ManRider™ ?

- Minimum design factors of 8:1
- Dual brakes
- Drum guards
- Design preview certs and data books upon request (when requested at time of order)

And, depending on where in the world it will be used
- CE certifications
- Overload devices
- Slack wire detectors
- Limit switches
- Emergency shut-offs
- Emergency lowering devices
- Spooling devices

FA Infinity™ Series - Main Options

Automatic drum brake

Drum guard (A option)

Limit switches (option S)

Overload protection with emergency stop

Exhaust mufflers (option J5)

CE package options

The above options are included as standard equipment in all CE marked winches. They are also available as separate options on non-CE winches. The automatic brake is a compulsory equipment for all CE models but it can be an automatic disc brake or an automatic band brake. Please select the automatic brake option from the brake section (see ordering menu) and add to the CE package option.

- **Drum guard:** prevents the operator from inadvertent contact with winch moving parts.
- **Top and bottom limit switches:** automatically stops the winch when the travel exceeds the pre-determined working distance. The mechanism is environmentally protected. Needs to be adjusted on site as per customer configuration/ application.
- **Pneumatic overload protection with emergency stop:** the overload protection automatically stops the winch in case of overload exceeding 125 – 130% of safe working load and brake is automatically activated. The emergency stop allows the operator to quickly stop the winch in case of an emergency situation. Pressing the e-stop button closes a shut-off valve which stops the main air from entering into the motor, brake is applied automatically.
- **Exhaust mufflers (for motor and control):** they consistently reduce the noise level without measurable loss of power. Easy to clean or replace.

Other options available

Remote control

Drum locking pin

Airline accessories

Rope press roller

Remote pilot pendent throttle
The FA Infinity™ Series can be remote controlled by PHS progressive remote pilot pendent up to 20 meters. This pendent includes an emergency stop on the CE version.

Drum locking dog (option L)
Allows to secure the drum for applications that require to maintain loads for long periods.

Airline accessories (options J1, J2 and J3)
A good air quality is a key factor for the longevity and the proper functioning of your equipment. These airline accessories, such as filter, regulator and lubricator are specially adapted to our FA Infinity™ winch for optimal performance.

Rope press roller assembly (option V)
The press roller minimizes tangles and "birdnesting" of the wire rope and increases its life.

Other options available (continued)

Grooved drum

Grooved drum

Ensures better rope spooling than plain drum. Allows a greater rope fleet angle up to 2°.

Construction cage (option E)

Makes using, storing and protecting winches easier than ever. Custom designs for any winch welcome.

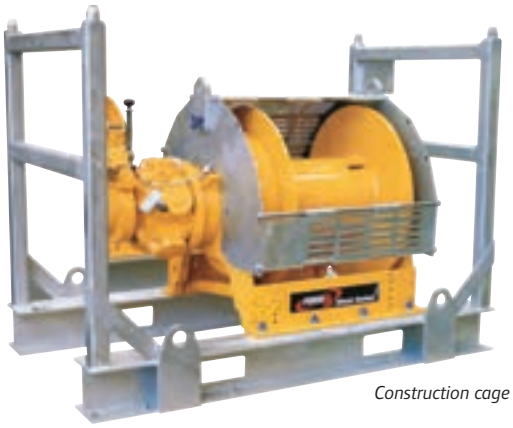

Construction cage

Adjustable Accu-Spool™ system (option Q)

See description on following page.

Electric-over-air pendent control system (control option 5XX)

Pendent Control

Optional pendent for secondary local control

Joystick lever type control

This updated remote control allows unlimited distance between the operator and winch or hoist without the excessive pressure drops, quick exhaust valves and resultant delays found in air control lines. On pendent controls, dialing-in an electrical setting determines the speed. Push buttons provide pay-in or pay-out. For variable speed control, the control buttons are depressed and the dial-in knob provides proportional control.
The joystick lever control provides traditional winch style variable speed in a hand held or wall mounted control box.

Standard features

- Portable, easy to hold control pendent.
- NEMA 4 control box and pendent.
- Holding down the control button and turning the Dial-In control provides variable speed.
- Automatic return-to-centre when joystick is released.
- Emergency stop button on control enclosure.
- Unlimited control length.
- Requires pilot control valve chest for field retrofit.
- Adaptable to most winch models and Hercu-Link hoists.

FA Infinity™ Series Air Winches
0.15 - 10 t Load Capacity

Accu-Spool™ adjustable level wind (option Q)

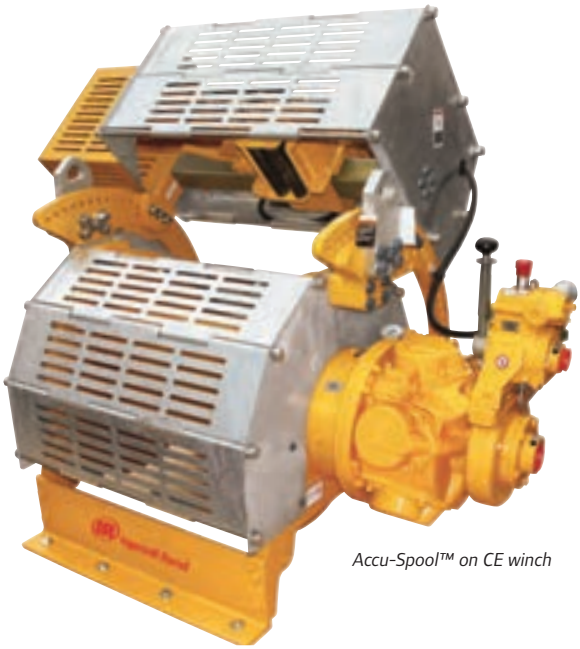

Accu-Spool™ on CE winch

2 hp radial piston drive motor. Fully enclosed oil bath gear box

Pressure sensing guide rollers

Precision cut rack & pinion drive assembly

Features and benefits

Accu-Spool™ replaces the need for conventional level winding systems. It is available as optional equipment for Ingersoll Rand FA Infinity™ winch Series (except for FA150KGi manriding model).

The pressure activated sensor drive is self adjusting, eliminating the wear and timing issues inherent in diamond screw designs.

This system compensates for fleet angles between 1.5° to 26°.

- Heavy duty radial piston drive motor.
- Fully enclosed oil bath gearbox.
- Precision cut rack and pinion drive assembly.
- Field adjustable to accommodate a variety of wire rope take-off angles.
- Configures for both overwound and under-wound wire rope take-off.
- Accepts a range of wire rope sizes without any adjustments to system.
- Manual override of controls for no-load spooling. Accu-Spool™ comes with an independent remote pilot pendent control, allowing the drive head to be moved when the winch is not operating.
- Promotes uniform and even spooling of wire rope.
- Reduces bird nesting and associated problems such crushing and abrasion.

How to order:

Begin with the base model driver and pricing of the FA Infinity™ Series winch you have selected.

Add the model driver option code: "Q" to the your winch model (see ordering menu on following page for complete winch model driver guide).

Note:

If the desired wire rope take-off angle is provided at time of an order the adjustable Accu-Spool™ will be preset for this angle prior to shipment. Otherwise the setting will be at the discretion of the factory.

To prevent inadvertent contact with moving parts only automatic brakes are available on adjustable Accu-Spool™ level winds.

Not all standard FA Infinity™ Series winch options are compatible with the Accu-Spool™ level wind due to mechanical or regulatory issues.

Option **not** compatible with the Accu-Spool™ system:

– Tall flange drums (FA5T and FA7T).

– Manual drum brakes (M brake option).

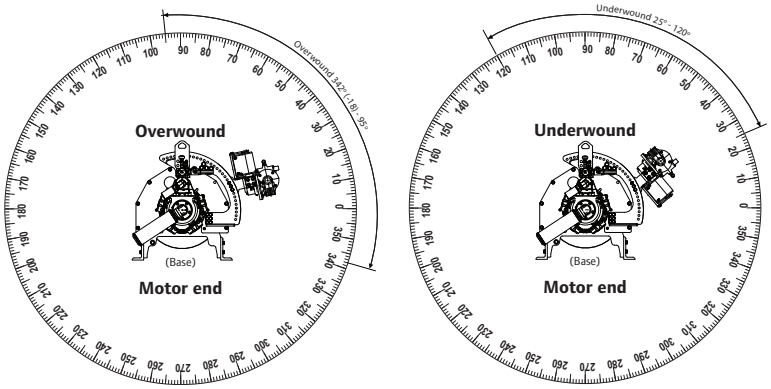

Adjustable Accu-Spool™ wire rope take-off range

FA Infinity™ Series - Ordering Menu

To order your winch, specify complete model number code as shown below:

FA Infinity™ Series winches in CE version are fitted as standard with:

- Drum guard
- Pneumatic overload protection device with emergency stop valve (main air shut-off).
- Rotary limit switches (top and bottom).
- Automatic brake (to be selected between automatic disc brake and automatic drum brake, or both).
- Exhaust mufflers (for control and motor).

FA7i – 24 X K 220 PV – CE

FA Infinity™ Series capacity	Drum length	Drum brake	Disc brake	Control
Utility winches **FA2i** 2000 kg capacity **FA2.5i** 2270 kg capacity **FA5i** 5000 kg capacity **FA7i** 7000 kg capacity **FA10i** 10 000 kg capacity **Utility winches / tall flange** **FA5Ti** 3820 kg capacity, **FA7Ti** 5720 kg capacity	**See below available drum lengths per model** **8** 8 inches (203 mm) **12** 12 inches (305 mm) **16** 16 inches (406 mm) **20** 20 inches (508 mm) **24** 24 inches (610 mm) **30** 30 inches (750 mm) **36** 36 inches (914 mm) **40** 40 inches (1016 mm) **42** 42 inches (1050 mm)	**A** Auto drum brake **M** Manual drum brake **X** No drum brake	**K** Auto disc brake **X** No auto disc brake	**1** Throttle lever **2XX** Remote full flow lever throttle **3XX** Remote pilot pendent throttle **4XX** Remote pilot lever throttle **5XX** Electric over air control *(XX = Specify hose length in feet)*
Dual rated winches **FA2i-MR** 1445/2000 kg capacity **FA2.5i-MR** 1445/2270 kg capacity **FA5i-MR** 3120/5000 kg capacity	**12** 12 inches (305 mm) **16** 16 inches (406 mm) **24** 24 inches (610 mm)	**A** Auto drum brake **M** Manual drum brake	**K** Auto disc brake	
Guideline / podline winches **FA7Ti-GL** 1540 kg capacity **FA7Ti-PL** 4620 kg capacity	**42** 42 inches (1050 mm)	**X** No drum brake	**K** Auto disc brake	**1** Throttle lever

Options	
7	Drum grooving (specify rope size in sixteenths of an inch, e.g. 7 = 7/16").
B	Extended warranty.
C1M3	-20° C ABS.
C2M3	-20° C DNV.
E	Construction cage.
G	Drum guard.
J	Airline accessories (1).
L	Drum locking pin (not available for dual rating winches).
M1	Material traceability - Per DIN 50049/EN10204 Para 2.2 "Typicals" (2).
M2	Material traceability - Per DIN 50049/EN10204 Para 3.1 actual per product as purchased (2).
M3	Material traceability - Per DIN 50049/EN10204 Para 3.1 actual per product as delivered in final condition (2).
N4	Manufactured under ABS survey.
N5	Manufactured under DNV survey.
P	Marine 812 finish paint.
P1	Marine 812-X paint system.
P2	Marine 812-X paint system, isocyanate free.
Q	Adjustable Accu-Spool™
S	Rotary limit switch (upper and lower).
U	Underwound wire rope takeoff.
V	Press roller.
W1	ABS witness test.
W2	DNV witness test.
W3	LRS witness test.
W4	Client witness of load test.
Y	Overload protector with E-Stop provided on lever throttle.
-CE	Compliance with the European machinery directive.

Standard drum lengths available in inches

Model no.	Drum length in inches								
	8"	12"	16"	20"	24"	30"	36"	40"	42"
FA2i		✔	✔	✔	✔				
FA2.5i	✔	✔	✔	✔	✔				
FA5i			✔	✔	✔	✔	✔		
FA7i				✔	✔	✔	✔		✔
FA10i					✔	✔	✔	✔	
FA5Ti			✔	✔	✔	✔	✔		
FA7Ti				✔	✔	✔	✔		✔
FA2i-MR		✔			✔				
FA2.5i-MR		✔			✔				
FA5i-MR			✔		✔				
FA7Ti-GL									✔
FA7Ti-PL									✔

(1) Airline accessories: *add 1 for filter, 2 for lubricator, 3 for regulator, 4 for strainer, 5 for muffler and 6 for liquidator, e.g. J123. For protection during shipment and due to the wide range of installation variables, the airline accessories are shipped loose for client installation.*

(2) M1, M2 and M3 options:

M1 *– Material traceability certificates according to EN 10204 (Ex DIN 50049) 2.2 on load bearing parts. This conformity document affirms (by the manufacturer) that parts are in compliance with the requirements of the order based on non-specific inspection and testing (i.e., results are typical material properties for these parts).*

M2 *– Material traceability certificates according to EN 10204 (Ex DIN 50049) 3.1 on load bearing parts. These documents affirm (by a department independent of the manufacturing department) that the actual parts used in the product are in compliance with the order based on specific inspection and testing (i.e., results are actual material properties for those parts).*

M3 *– Material traceability certificates according to EN 10204 (Ex DIN 50049) 3.1 on load bearing parts. These documents affirm (by a department independent of the manufacturing department) that the actual parts used in the product are in compliance with the order based on specific inspection and testing (i.e., results are actual material properties for those parts in a finished, as delivered condition).*

FA Infinity™ Series Air Winches

0.15 - 10 t Load Capacity

FA150KGi-MR Dedicated ManRider™

FA150KGi ManRider™ winches have been designed to meet the requirements of the oil exploration industry, particularly those specifications of the Norwegian Petroleum Directorate and DNV. Most models either carry or have pending design approval by Det Norske Veritas (DNV) and/or the American Bureau of Shipping (ABS). Fully type approved units available by ordering "N4" (ABS) or "N5" (DNV) options.
Note: It remains the user's responsibility to determine the suitability of this product for any particular use and to check for compliance with applicable regulations.

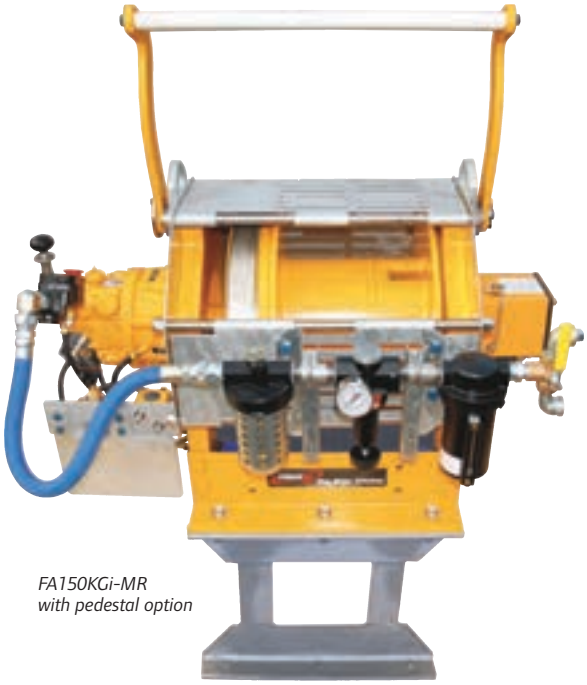

FA150KGi-MR with pedestal option

Features

- Piston type air motor
- Automatic internal disc brake.
- Automatic drum brake.
- Slack rope detector.
- Emergency stop and overload limiter.
- Standard design temperature is -20°C.
- Emergency lowering device.
- Lift to shift lever throttle.
- Rotary limit switch.
- Drum guard.
- Press roller.
- Filter, regulator, lubricator air preparation package.
- Muffler.
- 10:1 design factor.
- 18:1 D/d ratio on wire rope.
- CE compliance.
- Marine 812 finish paint "P" standard.

FA150KGi-MR with emergency lowering system option

See dimensions on page 28.

Specifications at 6.3 bar dynamic pressure (when winch is running) – **As per DNV regulations**

Model number	Rated capacity at top layer (kg)	LIFTING SPEED AT RATED LOAD at top rope layer (m/min)	at lowest rope layer (m/min)	Rated number of layers	Air consumption with rated load (m^3/min)	Sound level as per EN 14492-1 dB(A)	Weight without rope (kg)	ATEX marking Ex II 2 GD c IIB 135°C X
Lifting Ratings at 10:1 Design Factor								
FA150KGi-MR	150	29	25	8	14	89	340	√

Rope capacity in meters
For personnel lifting winches, the working rope capacity corresponds to max. storage capacity les 2.5 layers (i.e. less 25 mm with 10 mm dia. rope)

Model number	Minimum rope breaking force (kN)	Recommended rope diameter (mm)	Cumulated working rope capacities in meters with RECOMMENDED ROPE DIAMETER								Maximum rope storage capacity (m)
			Layer 1	Layer 2	Layer 3	Layer 4	Layer 5	Layer 6	Layer 7	Layer 8	
FA150KGi-MR	15	10	26	54	84	115	148	183	220	259	385

For storage capacities with other rope diameters, use our "drum storage calculator" at the following web address:
http://www.ingersollrandproducts.com/lifting/winches/drum.htm

FA150KGi-MR main options

Stainless steel hose package

Manual rope guide

Emergency lowering system

Pedestal base

Type approved models available

Certified to DNV-OS-E101 drilling plant or ABS certification of Drilling Systems.

Marine paint systems

The FA150KGi-MR is delivered as standard with a marine 812 finish paint. Two additional finishing levels are available as an option; marine 812-X paint system and marine 812-X paint system / isocyanate free (detailed list of components and treatments available on request).

Stainless steel hoses

Stainless steel braid reinforced hoses and stainless steel fittings.

Manual rope guide

Manual rope guide mounted on drum guard is available for better rope winding at no load operation.

Emergency lowering system

Per regulatory requirements every FA150KGi-MR winch is equipped with an emergency lowering device (ELD) to allow an (end user supplied) auxiliary air supply to be attached to the winch to facilitate emergency lowering in the event the main air supply is lost. Option "R" is a complete emergency lowering system which includes tank that serves as the air source during emergency lowering. No end user provided lower the load and the accumulator is charged during normal winch operation.

Pedestal base

It allows to raise the winch to working height. Galvanised steel.

Ordering menu

To order your winch, specify complete model number code as shown below:

FA150KGi M R 1 2 A 1 B H R P 1 – C E

Series / capacity	Type	Drum length	Brakes	Control	Options	CE conformity
FA Series, 150 kg capacity	**MR** ManRider	**12** 12 inches	**A** Automatic drum brake	**1** Lever control		**-CE** Compliance with the European machinery directive

7	Drum grooving; specify rope size in sixteenths, e.g., 7 = 7/16".
A	Drum guard with manual rope guide.
B	Winch pedestal base.
C1M3	-20° C - ABS.
C2M3	-20° C - DNV.
H	Stainless steel hose package for limit switch.
K	Stowage valve kit installed on winch.
M1	Material traceability per DIN 50049/EN10204 Para 2.2 "typicals".
M2	Material traceability per DIN 50049/EN10204 Para 3.1 actual. per product as purchased.
M3	Material traceability per DIN 50049/EN10204 Para 3.1 actuals. per product as delivered in final condition.
N4	Manufactured under ABS survey.
N5	Manufactured under DNV survey.
P1	Marine 812-X paint system.
P2	Marine 812-X paint system - isocyanate free.
R	Emergency lowering system (2 litre bottle).
W1	ABS witness test.
W2	DNV witness test.
W3	LRS witness test.
W4	Client witness of load test.

M1 *– Material traceability certificates according to EN 10204 (Ex DIN 50049) 2.2 on load bearing parts. This conformity document affirms (by the manufacturer) that parts are in compliance with the requirements of the order based on non-specific inspection and testing (i.e., results are typical material properties for these parts).*

M2 *– Material traceability certificates according to EN 10204 (Ex DIN 50049) 3.1 on load bearing parts. These documents affirm (by a department independent of the manufacturing department) that the actual parts used in the product are in compliance with the order based on specific inspection and testing (i.e., results are actual material properties for those parts).*

M3 *– Material traceability certificates according to EN 10204 (Ex DIN 50049) 3.1 on load bearing parts. These documents affirm (by a department independent of the manufacturing department) that the actual parts used in the product are in compliance with the order based on specific inspection and testing (i.e., results are actual material properties for those parts in a finished, as delivered condition).*

FA2i to FA10i Utility Air Winches (standard flanges)

FA2i to FA10i with disc brake only

Dimensions are subject to change without notice. Please contact Client Services for certified prints.

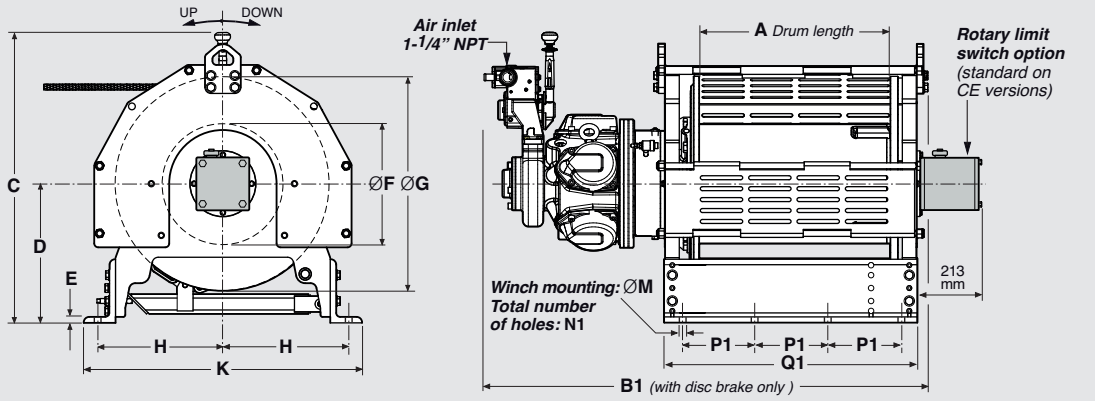

FA2i to FA10i with drum brake or with both drum brake and disc brake

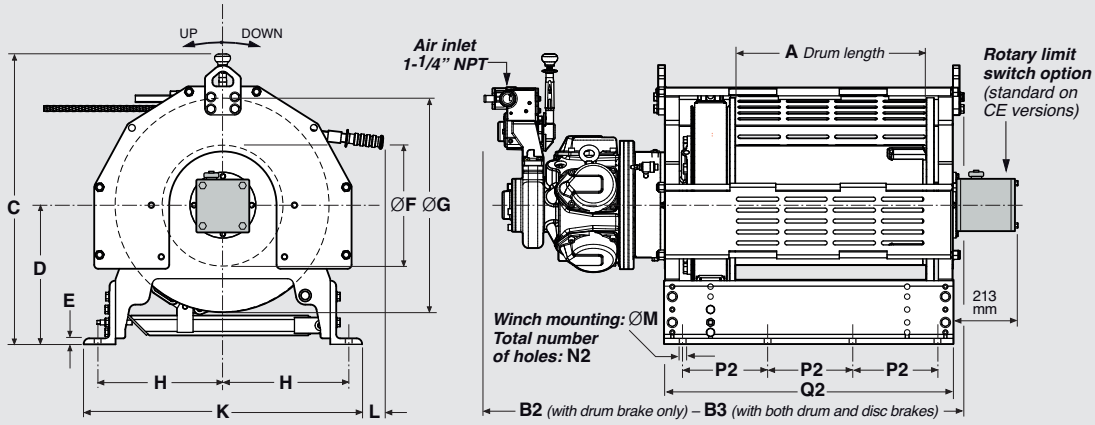

Dimensions in mm

Model no.	A	B1	B2	B3	C	D	E	F	G	H	K	L	M	N1	N2	P1	P2	Q1	Q2
FA2i-12...	305	968	945	1036	722	356	13	273	483	254	610	125	18	6	6	191	229	511	579
FA2i-16...	406	1069	1046	1138	722	356	13	273	483	254	610	125	18	8	8	159	191	612	681
FA2i-20...	508	1171	1148	1240	722	356	13	273	483	254	610	125	18	8	8	197	229	714	782
FA2i-24...	610	1273	1250	1341	722	356	13	273	483	254	610	125	18	8	8	229	254	816	884
FA2.5i-8...	203	996	986	1062	839	356	13	273	483	254	610	125	18	6	6	152	178	409	478
FA2.5i-12...	305	1097	1087	1163	839	356	13	273	483	254	610	125	18	6	6	203	229	511	579
FA2.5i-16...	406	1199	1189	1265	839	356	13	273	483	254	610	125	18	8	8	178	191	612	681
FA2.5i-20...	508	1300	1290	1367	839	356	13	273	483	254	610	125	18	8	8	203	229	714	782
FA2.5i-24...	610	1402	1392	1468	839	356	13	273	483	254	610	125	18	8	8	229	254	816	884
FA5i-16...	406	1204	1234	1311	928	445	19	381	686	397	889	66	21	6	6	159	229	605	720
FA5i-20...	508	1306	1336	1412	928	445	19	381	686	397	889	66	21	8	8	216	254	707	821
FA5i-24...	610	1407	1438	1514	928	445	19	381	686	397	889	66	21	8	8	229	267	809	923
FA5i-30...	762	1560	1590	1666	928	445	19	381	686	397	889	66	21	8	10	305	254	961	1075
FA5i-36...	914	1712	1742	1819	928	445	19	381	686	397	889	66	21	8	10	356	279	1114	1228
FA7i-20...	508	1356	1367	1443	1084	508	19	406	762	435	965	71	24	8	10	229	203	778	868
FA7i-24...	610	1458	1468	1544	1084	508	19	406	762	435	965	71	24	10	10	203	229	880	970
FA7i-30...	762	1610	1621	1697	1084	508	19	406	762	435	965	71	24	10	10	241	254	1032	1122
FA7i-36...	914	1763	1773	1849	1084	508	19	406	762	435	965	71	24	12	10	216	279	1184	1275
FA7i-42...	1067	1915	1925	2002	1084	508	19	406	762	435	965	71	24	12	12	254	254	1337	1427
FA10i-24...	610	1519	1615	1621	1213	533	15	508	965	537	1179	31	24	12	12	152	152	952	1054
FA10i-30...	762	1671	1768	1773	1213	533	15	508	965	537	1179	31	24	12	12	203	203	1105	1207
FA10i-36...	914	1824	1920	1925	1213	533	15	508	965	537	1179	31	24	12	12	203	203	1257	1359
FA10i-40...	1067	1920	2022	2027	1213	533	15	508	965	537	1179	31	24	12	12	203	203	1359	1461

FA5Ti, FA10Ti Utility Air Winches (tall flanges) and Guideline / Podline Winches

FA5Ti and FA7Ti with disc brake only

FA7Ti-GL and FA7Ti-PL

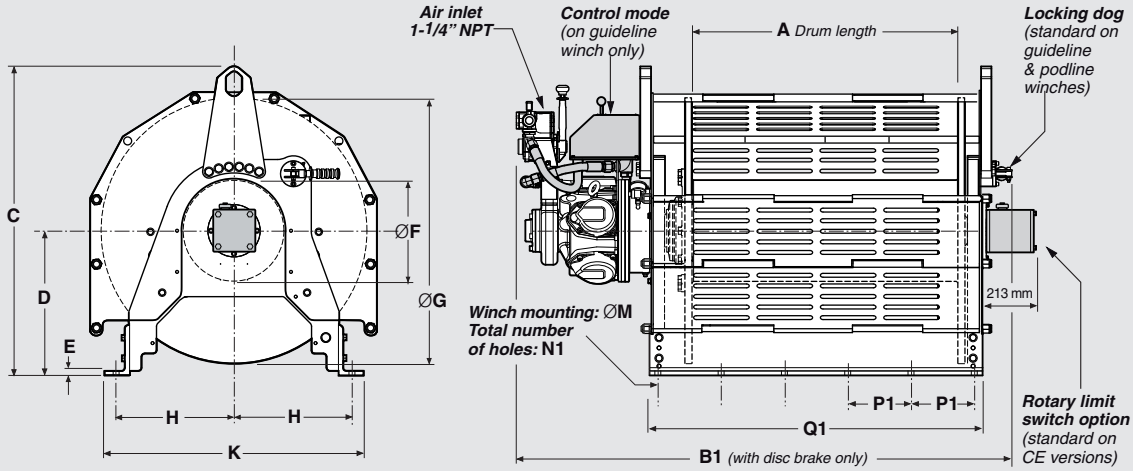

FA5Ti and FA7Ti with drum brake or with both drum brake and disc brake

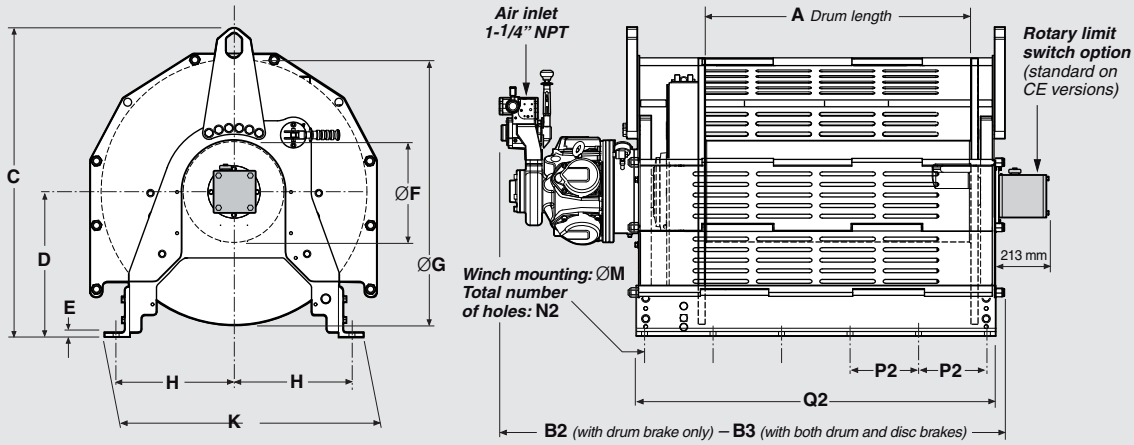

Dimensions are subject to change without notice. Please contact Client Services for certified prints.

Dimensions in mm

Model number	A	B1	B2	B3	C	D	E	F	G	H	K	M	N1	N2	P1	P2	Q1	Q2
FA5Ti-16…	406	1204	1234	1311	1086	508	19	381	889	435	965	21	6	6	159	229	605	720
FA5Ti-20…	508	1306	1336	1412	1086	508	19	381	889	435	965	21	8	8	216	254	707	821
FA5Ti-24…	610	1407	1438	1514	1086	508	19	381	889	435	965	21	8	8	229	267	809	923
FA5Ti-30…	762	1560	1590	1666	1086	508	19	381	889	435	965	21	8	10	305	254	961	1075
FA5Ti-36…	914	1712	1742	1819	1086	508	19	381	889	435	965	21	8	10	356	279	1114	1228
FA7Ti-20…	508	1356	1367	1443	1084	508	19	406	914	435	965	24	8	10	229	203	778	868
FA7Ti-24…	610	1458	1468	1544	1084	508	19	406	914	435	965	24	10	10	203	229	880	970
FA7Ti-30…	762	1610	1621	1697	1084	508	19	406	914	435	965	24	10	10	241	254	1032	1122
FA7Ti-36…	914	1763	1773	1849	1084	508	19	406	914	435	965	24	12	10	216	279	1184	1275
FA7Ti-42…	1067	1915	1925	2002	1084	508	19	406	914	435	965	24	12	12	254	254	1337	1427
FA7Ti-GL42…	1067	1984	—	—	1240	581	19	406	1067	473	1041	24	12	—	254	—	1337	—
FA7Ti-PL42…	1067	1984	—	—	1240	581	19	406	1067	473	1041	24	12	—	254	—	1337	—

FA Infinity™ Series Air Winches

0.15 - 10 t Load Capacity

Dual Rated Offshore ManRider™ Air Winches

FA2i-MR...
FA2.5i-MR...
and
FA5i-MR

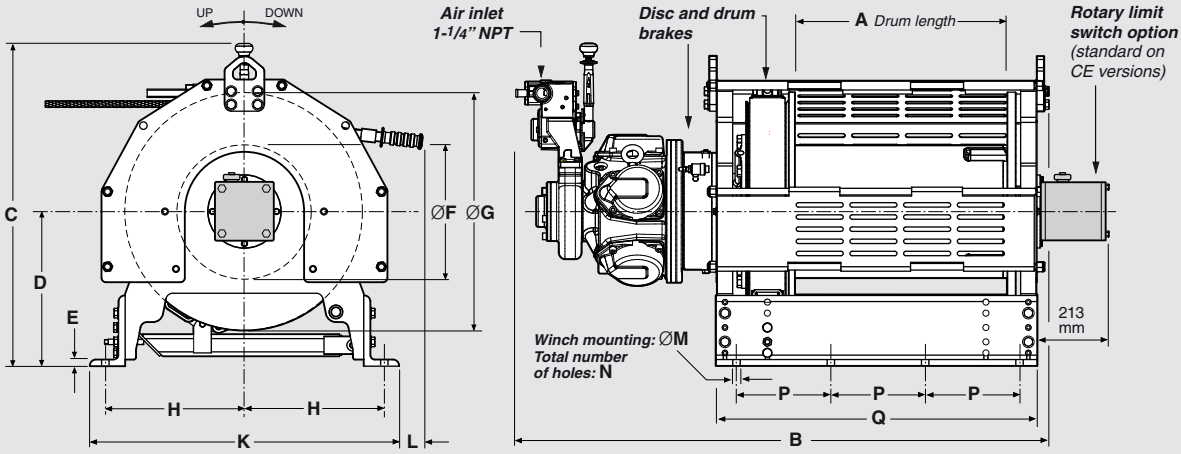

Dimensions in mm

Model number	A	B	C	D	E	F	G	H	K	L	M	N	P	Q
FA2i-MR12MK...	305	1036	723	356	13	273	483	254	610	125	18	6	191	579
FA2i-MR24MK...	610	1341	723	356	13	273	483	254	610	125	18	8	229	884
FA2.5i-MR12MK...	305	1168	839	356	13	273	483	254	610	125	18	6	191	579
FA2.5i-MR24MK...	610	1473	839	356	13	273	483	254	610	125	18	8	229	884
FA5i-MR16MK...	406	1311	928	444	19	381	686	397	889	68	21	6	191	719
FA5i-MR24MK...	610	1514	928	444	19	381	686	397	889	68	21	8	197	922

FA150KGi-MR Dedicated ManRider™

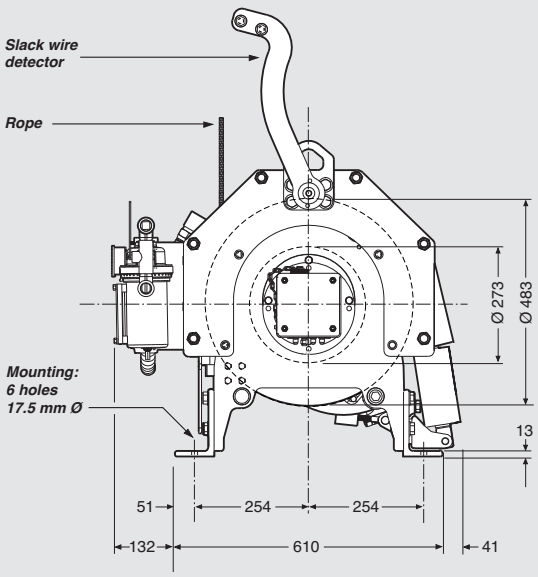

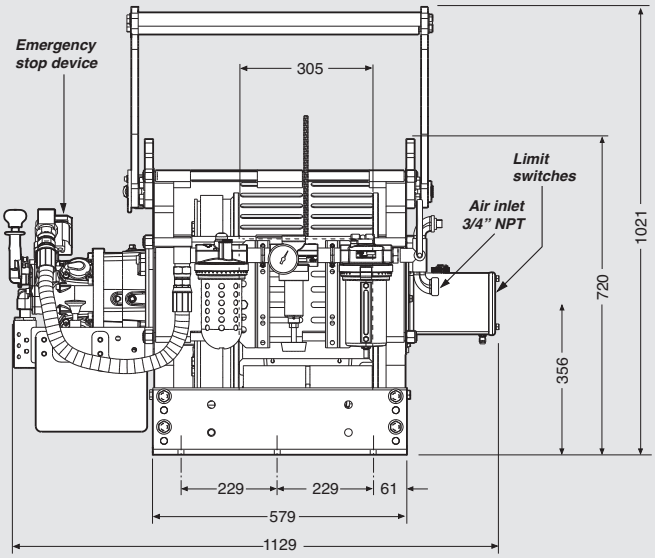

Dimensions are subject to change without notice. Please contact Client Services for certified prints.

Ingersoll Rand ARO-Flo Series

These filters, regulators, lubricators and FRL combinations are designed to keep your air supply in top condition, as well as enable your winch to operate at its peak performance.

Features

- Robust cast aluminium body.
- High-flow filter element with 5-micron filtration.
- Automatic drain.
- Reinforced metal bowls with sight glass.

FRL combinations 3/8" to 1":

- Regulated pressure 0-9.7 bar, max. inlet pressure 17 bar. Flush mount gauge and T-shape wall mount brackets included.

Separated filter, regulator and lubricator 1 1/4" and 1 1/2":

- Regulated pressure 0-8.5 bar, max. inlet pressure 20.7 bar. Gauge and connection nipples to be ordered separately.

NOTE: *our dedicated ManRider™ air winches are fitted with an air treatment equipment mounted as standard on the product and do not require, as a result, the equipment described hereafter.*

C383E1-811
3/4" combined FRL

C384F1-811
1" combined FRL

F355G1-411
1 1/4" filter

R375G1-100
1 1/4" regulator

L365G1-110
1 1/4" lubricator

104502 gauge

ARO-Flo Series equipment is exempt from the EU Directives 2002/95/EC (CE compliance), and 94/9/EC (ATEX 95).
ARO-Flo Series is Silicon free and meets 2002/95/EC (RoHS compliance).

Winch model	Winch air inlet size	FRL size	FRL combination part no.	Filter part no.	Regulator part no.	Gauge part no.	Lubricator part no.	Nipple part no. (1)
For Liftstar®, Pullstar® and FA Infinity™ Series								
LS2-300R… LS2-600R…	3/4" BSP	3/4" BSP	C383E1-811	—	—		—	
LS-1500R…	1" BSP	1" BSP	C384F1-811					
LS2000R… LS5000R…	1 1/4" BSP	1 1/4" BSP	—	F355G1-411	R375G1-100	104502	L365G1-110	38751038
PS2-1000R…	3/4" BSP	3/4" BSP	C383E1-811	—	—	—	—	—
PS2400R…	1" BSP	1" BSP	C384F1-811					
PS4000R… PS10000R…	1 1/4" BSP	1 1/4" BSP	—	F355G1-411	R375G1-100	104502	L365G1-110	38751038
FA2…	1 1/4" NPT	1 1/4" NPT	—	F35571-411	R37571-100	104502	L36571-110	38751038
FA2.5… FA5… FA7… FA10…	1 1/4" NPT	1 1/2" NPT	—	F35581-411	R37581-100	104502	L36581-110	NA

(1) Two nipples have to be ordered to assemble the filter / regulator / lubricator module.

Air Chain Hoists

Ingersoll Rand air hoists have been providing lifting solutions to industries around the globe since the early 1900's.

Today, we offer the broadest range of air operated chain hoists in the world up to 100 t capacity.

Our range includes hoists for high-speed production applications and for the harsh environments found in mines, shipyards, power plants, cement plants, refineries and onshore and offshore platforms.

We pride ourselves in our willingness and ability to take on tough applications with engineered special products.

Ingersoll Rand

CLK & MLK Series Air Chain Hoists

125 - 1000 kg Load Capacity

CLK Series

The CLK Series air chain hoist has been designed and engineered for production applications for loads up to 500 kg. Incredible durability with an ASME HST-5 rating of A5 (FEM/ISO mechanism classification of 1Am/M4) the CLK Series hoist are duty-rated to go 800 full-load hours between overhauls.

Features

- Meets ASME B30.16 specifications.
- Rugged, lightweight and compact design.
- Disc brake is non-asbestos and spring engaged with air release.
- Quiet operation <75 dBA sound levels.
- Upper and lower limit stops prevent dangerous over-travel of the hook.
- Full flow pendent for maximum control and enhanced load positioning.
- 100% duty cycle multi-vane (6) air motor.
- Hook or trolley mounted versions available.
- Steel snap hooks with safety latches.
- Standard lift is 10 feet; additional lifts are available.
- Standard pendent length is 6 feet or 4 feet less than lift.

CL500K-2C10-C6U-E

MLK Series

Serving industry for over 25 years, the rugged and reliable MLK Series hoists are ideal for high production cycle operations. Spark resistant models are also available. MLK Series come with a wide range of options and accessories.

Features

- Meets ASME B30.16 specifications
- 100% duty cycle.
- These hoist are ideal for the harsh environments found in steel mills, foundries and electroplating operations. These are also ideal for high duty cycle applications.
- Pull chain or pilot pendent controls provide precise spotting capabilities.
- Self adjusting, air operated disc brake is spring applied and air released. Wear tested to over one million cycles before replacement.
- All rotating parts are supported by either ball or roller type bearings. Unique planetary gearing system assures long life.
- Thoughtful design includes parts interchangeability, inlet swivels, exhaust air chain lubrication, control adjustment screws and easy conversion from pull chain to pendent control.
- Spark resistant models and a wide range of options and accessories are available.

ML500K-2C10-C6-E

CLK and MLK Series are particularly suitable for use in potentially explosive atmospheres. In their standard design, they are classified as equipment category 3 for applications in zone 2 as per ATEX 94/9/CE Directive (ATEX marking Ex II 3 GD c IIB 135°C X). **MLK Series are also available in spark resistant, version for use in explosive atmospheres zone 1 (ATEX marking Ex II 2 GD c IIB 135°C X).**

CLK & MLK Series Air Chain Hoists

125 - 1000 kg Load Capacity

Specifications / Hook-mount configuration

Specifications at 6.3 bar dynamic pressure (when hoist is running) – Working pressure 5 to 7 bar.

Model number	Rated capacity (kg)	Falls of load chain	Min. headroom (mm)	Lifting speed at rated load (m/min)	Lifting speed at no load (m/min)	Lowering speed at rated load (m/min)	Air cons. at rated load (m^3/min)	Sound pressure (1) (dbA)	Hoist weight (2) (kg)	Chain size (mm)	Chain weight/ 1m extra lift (kg)
CLK Series - Hook-mount configuration											
CL125K	125	1	292	13.1	17.1	11.3	0.9	75	15.4	4x12	0.36
CL250K	250	1	292	9.8	17.1	13.7	0.9	75	15.4	4x12	0.36
CL500K	500	2	324	4.6	7.9	6.7	0.9	75	17.2	4x12	0.72
MLK Standard Series / Hook-mount configuration											
ML250K	250	1	457	30.8	52.1	35.7	2.1	89	21.8	6.4x19.5	1.0
ML500K	500	1	457	16.8	32.3	29.6	2.1	89	21.8	6.4x19.5	1.0
ML1000K	1000	2	457	8.5	16.2	14.9	2.1	89	27.7	6.4x19.5	2.0
MLK for explosive atmosphere zone 1 (as per ATEX Ex II 2 GD c IIB 135°C X) **/ Hook-mount configuration**											
ML250KR	250	1	457	7.9	12.8	11.6	2.1	89	28.1	6.4x19.5	1.0
ML500KR	500	2	457	4.0	6.4	6.1	2.1	89	28.1	6.4x19.5	2.0

Additional specifications for MLK Series in trolley-mount configuration

Model number	Rated capacity (kg)	Trolley + Hoist min. headroom (mm)	Trolley flange adjustment (mm)	Min. inside curve radius (m)	Travelling speed at rated load (m/min)	Trolley air cons. at rated load (m^3/min)	Weight (hoist + trolley) (kg) (2)
MLK Series with RT010 plain trolley (3)							
ML250K(R)...DA	250	457	68 - 152	1.0	–	–	34.5
ML500K(R)...DA	500	457	68 - 152	1.0	–	–	34.5
ML1000K(R)...DA	1000	457	68- 152	1.0	–	–	40.4
MLK Series with RT010 motorised trolley							
ML250K(R)...HA	250	457	68 - 152	1.0	29	1	37.7
ML500K(R)...HA	500	457	68 - 152	1.0	29	1	37.7
ML1000K...HA	1000	457	68- 152	1.0	28	1	43.6
MLK Series with TIR6600 motorised trolley for wide beam							
ML250K(R)...HD	250	442	152 - 305	1.1	29	1	37.9
ML500K(R)...HD	500	442	152 - 305	1.1	28	1	37.9
ML1000K...HD	1000	442	152 - 305	1.1	27	1	43.8

(1) Sound pressure levels are measured per European standard EN 14492-2 — (2) Weight with standard height of lift (3 m) and standard length of control (2 m). (3) Also available with hand chain control on request.

CLK Series - Hook-mount configuration

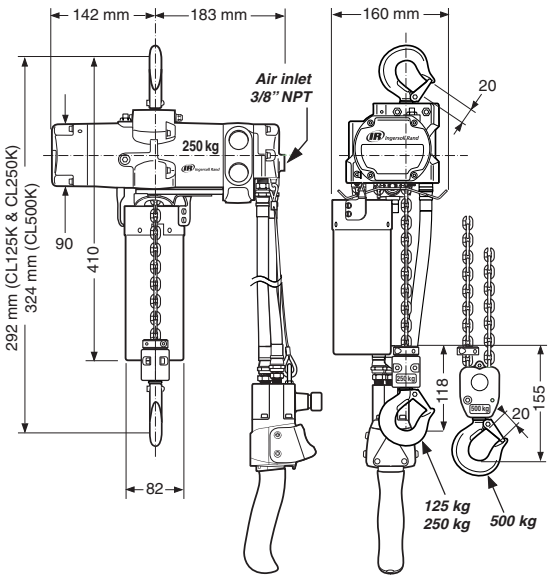

MLK Series - Hook-mount configuration

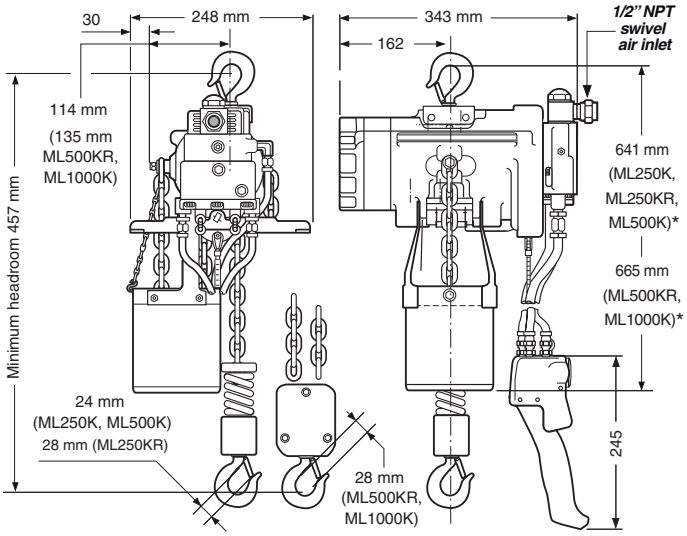

** Dimension for a 14 m capacity fabric chain bucket (1 fall). For a 24 m capacity metallic chain bucket (1 fall), add 153 mm.*

MLK Series in standard trolley mount configuration with RT010 trolley – Plain (DA) or motorised (HA)

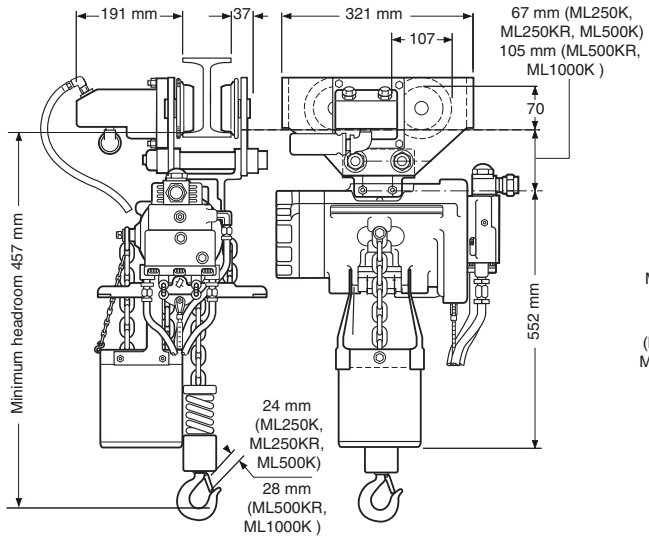

MLK Series in trolley mount configuration for wide beam – TIR6600 trolley / motorised only (HD)

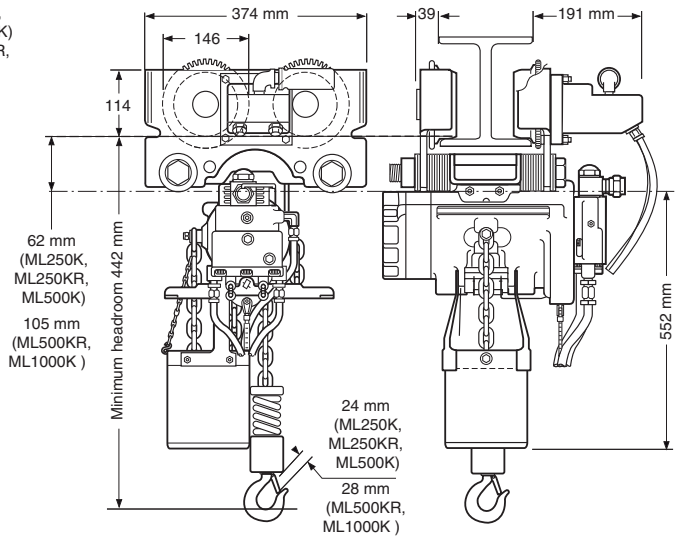

Ordering menu

CLK hoists are delivered as standard in compliance with the European machinery directive 2006/42/EC and the European standard for Power Driven Hoists EN 14492-2. They include as standard a main air emergency stop and a chain bucket. For CLK under manual trolley, see separated trolleys on page 66.

CL250K – 2 C 10 – C6 U – E

Series / load capacity	Control type	Suspension	Lift in ft	Control length in ft (4)	Standard equipment
CL125K 125 kg **CL250K** 250 kg **CL500K** 500 kg	**2** Full flow pendent control	**A** Fixed lug (Rigid mounting part for RT010A trolley) **C** Top hook	**10** Standard 10 feet (3 m) **15** Standard 15 feet (4.5 m) **20** Standard 20 feet (6 m) **XX** **Above 20 ft,** specify height of lift in feet (200 ft max. for CL125K & 250, 100 ft max. for CL500K)	**C6** 6 feet (1.8 m) **C13** 13 feet (4 m) **C18** 18 feet (5.5 m) **CXX** Specify length of control **in feet** (40 ft / 12 m max. pendent hose length),	**U** Chain bucket, 40 ft of lift capacity for CL125K and CL250K, 20 ft of lift capacity for CL500K **-E** Compliance with the European machinery directive (includes emergency stop as standard)

(4) In order to reduce the control response time, quick exhaust valves are required from 19 ft (5.8 m) of pendent hose length. Valves need to be evenly spaced between pendent handle and hoist on "up" and "down" hoses. From 19 ft to 30 ft (5.8 to 9 m), 1 valve per hose is required — From 30 ft to 40 ft (9 to 12 m), 2 valves per hose are required. Valve part no. ***MR-939-6***

MLK CE marked models are compliant with the European machinery directive 2006/42/EC and the European standard for power driven hoists EN 14492-2. They include as standard a main air emergency stop (not required with pull cord control). For hoists with trolley, also specify beam size, type and flange width.

ML500K – 3 HA 10 – C6 U – E

Series / load capacity	Control type	Suspension	Lift in ft	Control length in ft	Options
Standard Series **ML250K** 250kg **ML500K** 500kg **ML1000K** 980kg	**1** Cord control (not available for hoist under motorised trolley) **2** PHS pendent **3** Two motor PHS Pendent (for hoist & trolley)	**C** Swivel top hook (not for spark resistant model) **DA** Plain rigid universal trolley **HA** Vane motor driven universal trolley **HD** Vane motor driven universal trolley for wide beam	**10** Standard 10 feet (3 m) **XX** Specify height of lift in feet, e.g. 10 = 10 ft (3 metre)	**CX** Specify length of control in feet, for standard models, e.g. C6 = 6 ft (1.8 metre)	**S** Chain container steel, 24 m capacity (1 fall) **U** Chain container fabric, 14 m capacity (1 fall)
Spark Resistant Series (5) **ML250KR** 250kg **ML500KR** 500kg		**R** Bronze hook (only for spark resistant model)		**RX** Specify length of control in ft, for spark resistant models, e.g. R6 = 6 ft (1.8 metre)	**-E** Compliance with the European machinery directive (6)

(5) Spark Resistant Series include top and bottom hooks in bronze and stainless steel load chain. In addition, copper plated trolley wheels when fitted with trolley.
(6) There is no need to select "-E" when the hoist is fitted with cord control.

Liftchain® Series Air Chain Hoists

1.5 - 100 t Load Capacity

The Liftchain® LC2A Series is the result of a long experience in heavy load lifting applications in the most difficult and extreme environments around the world. Setting new standards for safety and reliability, the LC2A Series is intended for tough industrial applications on offshore oil rigs, shipyards, petrochemical, refineries, foundries, steels mills, mining, tunneling, etc...

Features

- Rugged, compact design & light weight with all steel construction for better durability.
- Particularly adapted for difficult environments – Insensitive to dust and humidity. 100% duty cycle.
- Exclusive gear type air motor with better ability than other motors to accept contaminated air. High starting torque ensuring good spotting capability.
- Virtually maintenance free and reduced downtimes.
- Automatic multi disc brake, fully enclosed for better protection and corrosion resistance. Maintenance free, no adjustment required. Low pressure brake with self cleaning "venturi effect".
- Precision control with infinitely variable speed through pilot pendent or pull chain control.
- Overload protection device delivered as standard on CE marked versions, optional on Non-CE versions.
- Main air emergency stop as standard on CE marked versions, optional on Non-CE versions.
- Upper and lower limit switches, integrated in the hoist body for better protection. Allows the hoist to be also used in horizontal position. No adjustment required.
- Calibrated load chain, grade 80. Corrosion resistant treated for better protection and longer life. 5:1 design factor for safety and durability.
- Improved exhaust muffler. Low noise level. Easy cleaning and easy replacement.
- Meets worldwide standards: European standards FEM9.511 and FEM 1001 for lifting. U.S. standard ASME/ANSI B30.16. Duty rating FEM 1Bm / ISO M3.
- Several types of configuration are available: hook-mount, trolley-mount versions, low headroom versions for use in restricted spaces, and mining versions fitted with specific equipment.

LC2A250QIP3VE

CE marked models are compliant with the latest European machinery directive N° 2006/42/EC and the European standard for power driven winches EN 14492-2.
These models include as standard the following safety features: Built-in overload protection device — Emergency stop at pendent and built-in main air shut-off as per EN 418 — CE declaration of conformity.

LIFTCHAIN® air hoists are particularly suitable for use in potentially explosive atmospheres, unlike electric hoists. In their standard design, they are classified as equipment category 3 for applications in zone 2 as per ATEX 94/9/CE Directive (ATEX marking **Ex II 3 GD c IIB 135°C X**). For more hazardous areas such as zone 1, they are offered with a special spark resistant package (ATEX marking **Ex II 2 GD c IIB 135°C X**). Special mining models are classified as equipment category M2. ATEX marking **EX IM 2 CX**.

Hook-Mount Configuration

These standard hook-mount models can be customised with many options for effective adaptation to your application – type of control, chain bucket, suspension... (see pages 39 and 40 for details).

See dimensions on pages 41 and 42.

LC2A030DIP2C-E

LC2A080DIC1C

LC2A120DIP2C-E

LC2A375TIP2C3M2P-E

Specifications at 6.3 bar dynamic pressure (when hoist is running) — Working pressure 5 to 7 bar.
As per European standard EN range 14492-2 – Group of mechanism as per FEM 1Bm / ISO M3.

Model number	Rated capacity (t)	Falls of load chain	Min. headroom (mm)	Lifting speed at rated load (m/min)	Lifting speed at no load (m/min)	Lowering speed at rated load (m/min)	Air cons. at rated load (m^3/min)	Sound level (1) (dbA)	Hoist weight (2) (kg)	Chain size (mm)	Chain weight/ 1m extra lift (kg)
LC2A Standard Series – Hook-mount											
LC2A015SI	1.5	1	409	6.2	11.0	8.5	4.0	78	38	8x24	1.5
LC2A030DI	3.0	2	549	3.0	5.5	4	4.0	78	48	8x24	3.0
LC2A040SI	4.0	1	580	3.9	7.0	4.5	4.5	76	90	13x36	3.8
LC2A060QI	6.0	4	653	1.5	2.5	2.0	4.0	78	74	8x24	6.0
LC2A060SI	6.0	1	717	2.2	3.6	2.7	5.2	79	125	16x45	5.7
LC2A080DI	8.0	2	807	1.8	3.5	2.2	4.4	76	118	13x36	7.6
LC2A120DI	12.0	2	945	1.1	1.8	1.3	5.0	79	170	16x45	11.4
LC2A125SI	12.5	1	865	3.2	6.0	5.0	10	93	395	22x66	10.7
LC2A180TI	18.0	3	1063	0.7	1.2	0.9	5.0	79	277	16x45	17.1
LC2A250QI	25.0	4	1156	0.5	0.9	0.6	5.0	79	324	16x45	23.0
LC2A250DI	25.0	2	1235	1.6	3.0	2.5	10	93	558	22x66	21.4
LC2A375TI	37.5	3	1484	1.1	2.0	2.0	10	93	855	22x66	32.1
LC2A500QI	50.0	4	1590	0.8	1.5	1.5	10	93	965	22x66	42.8
LCA750TI	75.0	3	2338	0.4	0.7	0.7	10	93	1700	32x90	73.5
LCA1000QI	100	4	2455	0.3	0.5	0.5	10	93	2200	32x90	98.0

(1) Sound pressure levels are measured per European standard EN 14492-2
(2) Weight with standard height of lift (3 m) and standard length of control (2 m).

Liftchain® Series Air Chain Hoists

1.5 - 100 t Load Capacity

Trolley-Mount Configuration

These standard trolley-mount models can be customised with many options for effective adaptation to your application (type of control, chain bucket, suspension...).

See dimensions on pages 43 and 44.

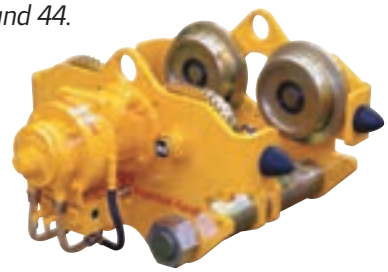

12 t motorised trolley sub-assembly

LC2A375TIP3RN

Specifications

THE SPECIFICATIONS HEREUNDER CORRESPOND TO THE TROLLEYS. FOR THE LIFTING SPECIFICATIONS, PLEASE REFER TO THE CORRESPONDING HOIST ON THE PREVIOUS PAGE.

Specifications at 6.3 bar dynamic pressure (when hoist is running). Working pressure 5 to 7 bar.

As per European standard EN range 14492-2 – Group of mechanism as per FEM 1Bm / ISO M3.

Model number	Rated capacity (t)	Trolley + Hoist min. headroom (mm)	Trolley flange adjustment (mm)	Min. inside curve radius (m)	Travelling speed at rated load (1) (m/min)	Trolley air cons. at rated load (m^3/min)	Weight (hoist + trolley) (kg) (2)
LC2A Standard Series with MANUAL TROLLEY (plain or geared trolley)							
LC2A015SI	1.5	480	80 - 200	2	–	–	86 (92)
LC2A030DI	3.0	592	80 - 200	2	–	–	98 (100)
LC2A040SI	4.0	590	80 - 200	2	–	–	140 (142)
LC2A060QI	6.0	702	100 - 310	3	–	–	200 (207)
LC2A060SI	6.0	730	100 - 310	3	–	–	250 (257)
LC2A080DI	8.0	815	100 - 310	3	–	–	243 (250)
LC2A120DI	12.0	995	130 - 310	3	–	–	335 (343)
LC2A180TI	18.0	1195	140 - 310	5	–	–	652 (660)
LC2A250QI	25.0	1240	140 - 310	5	–	–	700 (708)
LC2A Standard Series with MOTORISED TROLLEY							
LC2A015SI	1.5	480	80 - 200	2	21	1.3	95
LC2A030DI	3.0	592	80 - 200	2	17	1.3	103
LC2A040SI	4.0	590	80 - 200	2	15	1.3	145
LC2A060QI	6.0	702	100 - 310	3	15	1.3	217
LC2A060SI	6.0	730	100 - 310	3	15	1.3	267
LC2A080DI	8.0	815	100 - 310	3	12	1.3	260
LC2A120DI	12.0	995	130 - 310	3	12	1.5	352
LC2A125SI	12.5	1000	160 - 310	3	15	1.5	570
LC2A180TI	18.0	1195	140 - 310	5	15	1.9	652
LC2A250QI	25.0	1240	140 - 310	5	15	1.9	700
LC2A250DI	25.0	990	160 - 310	50	12	1.5 x 2	935
LC2A375TI	37.5	1134	160 - 310	90	15	1.9 x 2	1585
LC2A500QI	50.0	1182	160 - 310	90	15	1.9 x 2	1735
LCA750TI	75.0	1845	300 - 310	130	15	1.9 x 4	4500
LCA1000QI	100	1901	300 - 310	130	15	1.9 x 4	4700

(1) In Rack & Pinion configuration, the trolley speed is divided by two.
(2) Weight with standard height of lift (3 m) and standard length of control (2 m) – Figure between brackets correspond to geared trolleys

Low-Headroom Configuration

This particular trolley hoist arrangement is offering more room to lift the load compared to a standard trolley mount version, thus ideally suited for applications where space is particularly restricted.

LC2A250QIP3LVE3M2A-E.

Specifications at 6.3 bar dynamic pressure (when hoist is running) — Working pressure 5 to 7 bar.
As per European standard EN range 14492-2 – Group of mechanism as per FEM 1Bm / ISO M3.

Model number	Rated capacity (t)	Falls of load chain	Min. headroom (mm)	Lifting speed at rated load (m/min)	Lifting speed at no load (m/min)	Lowering speed at rated load (m/min)	Travelling speed at rated load (1) (m/min)	Trolley flange adjustment (mm)	Min. inside curve radius (m)
LC2A Low Headroom Series									
LC2A015SIP3L	1.5	1	275	3.9	7.4	6.4	17	81 - 310	10
LC2A030DIP3L	3.0	2	386	1.9	3.7	3.2	17	81 - 310	10
LC2A060QIP3L	6.0	4	465	1.5	2.5	2.0	15	120 - 310	10
LC2A060SIP3L	6.0	1	475	2.2	3.6	2.7	15	140 - 310	10
LC2A080DIP3L	8.0	2	590	1.8	3.5	2.2	12	120 - 310	10
LC2A120DIP3L	12.0	2	670	1.1	1.8	1.3	12	140 - 310	10
LC2A180TIP3L	18.0	3	730	0.7	1.2	0.9	12	210 - 310	10
LC2A250QIP3L	25.0	4	775	0.5	0.9	0.6	12	160 - 310	10

Model number	Air consumption at rated load: Lifting (m^3/min)	Travelling (m^3/min)	Sound level/ lifting (2) (dbA)	Total weight (3) (kg)	Chain size (mm)	Chain weight/ 1m extra lift (kg)
LC2A015SI3L	2.1	1.3	78	120	8x24	1.4
LC2A030DI3L	2.1	1.3	78	130	8x24	2.8
LC2A060QIP3L	4	1.3	78	250	8x24	6.0
LC2A060SIP3L	5	1.3	79	500	16x45	5.7
LC2A080DIP3L	5	1.9	76	300	13x36	7.6
LC2A120DIP3L	5	1.9	79	540	16x45	11.4
LC2A180TIP3L	5	1.9	79	690	16x45	17.1
LC2A250QIP3L	5	1.9	79	740	16x45	22.8

See dimensions on page 45.

(1) In Rack & Pinion configuration, the trolley speed is divided by 2.

(2) Sound pressure levels are measured per European standard EN 14492-2

(3) Weight of low headroom hoist / trolley with standard height of lift (3 m) and standard length of control (2 m).

Liftchain® Series Air Chain Hoists

1.5 - 100 t Load Capacity

LC2A080DSMP2C

"Miner" Series

The Mining models are designed for the heavy duty conditions found in the underground mining and tunneling industries.
Their construction is based on the standard LC2A models.

Main differences compared to the standard LC2A models:

- Suitable to operate at 4 bar.
- Top hook mounted on chain links for increased flexibility. 1 extra bottom hook (optional) for alternate pulling operation.
- Top and bottom limit switches through resistant buffer stops which comes against the hoist central part.
- Cast iron pendent control.

Specifications at 4 and 6.3 bar dynamic pressure (when hoist is running) — Working pressure 4 to 7 bar.
As per European standard EN range 14492-2 – Group of mechanism as per FEM 1Bm / ISO M3.

				PERFORMANCES AT 4 BAR (58 PSI)			PERFORMANCES AT 6.3 bar (90 PSI)		
Model number	Number of load hooks	Rated capacity on each hook (t)	Min. headroom (mm)	Pulling speed at rated load (m/min)	Speed no load (m/min)	Air cons. at rated load (m3/min)	Pulling speed at rated load (m/min)	Speed no load (m/min)	Air cons. at rated load (m3/min)
LC2A Mining Series									
LC2A015SM	**1**	**1.5** (simple hook)	608	3.2	9	2.2	6.2	11	4.0
LC2A015SSM	**2**	**1.5** (simple hook) **1.5** (simple hook)	608 608	3.2 3.2	9 9	2.2	6.2 6.2	11 11	4.0
LC2A030DM	**1**	**3** (double hook)	675	1.5	4.5	2.2	3	5.5	4.0
LC2A030DSM	**2**	**1.5** (simple hook) **3** (double hook)	608 675	3.2 1.5	9 4.5	2.2	6.2 3	11 5.5	4.0
LC2A040SM	**1**	**4** (simple hook)	757	1.7	4	3.0	3.9	7	4.5
LC2A040SSM	**2**	**4** (simple hook) **4** (simple hook)	757 757	1.7 1.7	4 4	3.0	3.9 3.9	7 7	4.5
LC2A060SM	**1**	**6** (simple hook)	952	1.4	2	2.5	2.2	3.6	5.2
LC2A060SSM	**2**	**6** (simple hook) **6** (simple hook)	952 952	1.4 1.4	2 2	2.5	2.2 2.2	3.6 3.6	5.2
LC2A080DM	**1**	**8** (double hook)	940	0.9	2	3.0	1.8	3.5	4.5
LC2A080DSM	**2**	**4** (simple hook) **8** (double hook)	757 940	1.7 0.9	4 2	3.0	3.9 1.8	7 3.5	4.5
LC2A120DM	**1**	**12** (double hook)	1148	0.7	1	2.5	1.1	1.8	5.2
LC2A120DSM	**2**	**6** (simple hook) **12** (double hook)	952 1148	1.4 0.7	2 1	2.5	2.2 1.1	3.6 1.8	5.2

Model number	Sound level (1) (dbA)	Hoist weight (2) (kg)	Chain size (mm)	Chain weight/ 1m extra lift (kg)
LC2A015SM	79	41	8 x 24	1.4
LC2A015SSM	79	42	8 x 24	1.4
LC2A030DM	79	48	8 x 24	2.8
LC2A030DSM	79	50	8 x24	2.8
LC2A040SM	76	90	13 x 36	3.8
LC2A040SSM	76	92	13 x 36	3.8
LC2A060SM	79	125	16 x 45	5.7
LC2A060SSM	79	127	16 x 45	5.7
LC2A080DM	76	118	13 x 36	7.6
LC2A080DSM	76	120	13 x 36	7.6
LC2A120DM	79	171	16 x 45	11.4
LC2A120DSM	79	179	16 x 45	11.4

(1) Sound pressure levels are measured per European standard EN 14492-2
(2) Weight measured with standard height of lift (3 m) and standard length of control (2 m).

Note: It is strongly recommended to use a lubricating and a filtration system on the compressed airline. The compressed air temperature must not exceed 65°C at the motor air inlet.
For higher temperature, please consult us.

See dimensions on page 46.

LIFTCHAIN® Air Chain Hoists Main Options

Types of suspensions
The Liftchain® Series are scheduled for many configurations, from simple hook or fixed lug, to various types of trolleys (plain, geared or motorised). See the ordering menu on following page for the complete list of suspension types.

Chain containers, option A, B, C or D
Chain containers are a simple and economical way of capturing the load chain and preventing it from interfering with the load, hoist control cords, or other objects. They are available in canvas or in zinc plated steel according to their chain capacity.

Airline accessories, options J1, J2 and J3
A good air quality is a key factor for the longevity and the proper functioning of your air hoists. Optional airline accessories, such as Filter,Regulator and Lubricator, specially adapted to our LC2A hoists, are available on request.

Spark resistant package, option T1, for ATEX zone 1
A special spark resistant package is available for products used in potentially explosive areas classified as ATEX zone 1.

Products ordered with this option will have the ATEX marking EX II 2 GD c IIB 135°C.

The package includes the following features:

For the hoist:
- Cast iron pendent.
- Bronze coated bottom hook assembly.

For the trolley:
- Solid bronze wheels.
- Pinion drive in solid bronze or stainless steel.
- Cast iron pendent.
- Bronze coated hand wheel for geared trolley.
- Brass hand chain guide for geared trolley.

Rack & pinion option
Rack & pinion drive are usually used on floating installations or vessels. This positive drive design keeps the hoist trolley in position in the event of heavy swell (no sliding on the beam). It also allows precise travel positioning when operating.

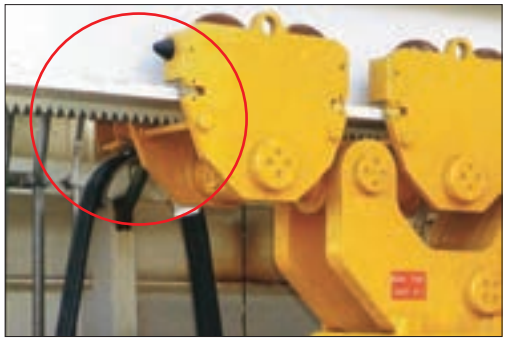

Liftchain® Series Air Chain Hoists

1.5 - 100 t Load Capacity

LIFTCHAIN® Series Ordering Menu

To order your hoist, specify complete model number code as shown below. For hoists with trolley, specify beam size, type and flange width. Note that 0 (zero) is a number, not a letter in model part numbers.

LC2A in CE version are fitted as standard with built-in overload protection and emergency stop button on pendent and built-in main air shut-off valve.

LC2A Series from 1.5 to 25 t capacity

L C 2 A 0 3 0 D I P 3 V U 3 M 2 J 1 2 – E

Series	Load capacity	Range	Control	Suspension	Lift & Control	Options
LC2A LIFTCHAIN AIR SERIES, 2nd Generation	**015S** 1.5 t, single fall **030D** 3 t, double falls **040S** 4 t, single fall **060S** 6 t, single fall **060Q** 6 t, quadruple falls **080D** 8 t, double falls **120D** 12 t, double falls **180t** 18 t, triple falls **250Q** 25 t, quadruple falls *For mining models with 2 load hooks, add the letter "S", e.g. LC2A030DS (valid up to 12 t capacity).*	**I** Standard Industrial **M** Mining (up to 12 t capacity)	**C1** Pull Chain (not available for Mining range) **P2** 1 motor pendent **P3** 2 motor pendent (for hoist with motorised trolley)	**A** Fixed lug **C** Swivel top hook **PU** Plain rigid universal trolley (flat or tapered beam) 1,5 to 8 t. **PE** Plain rigid trolley (flat beam) 12 to 25 t. **PN** Plain rigid trolley (tapered beam) 12 to 25 t. **GU** Geared rigid universal trolley (flat or tapered beam) 1,5 to 8 t. **GE** Geared rigid trolley (flat beam) 12 t only. **GN** Geared rigid trolley (tapered beam) 12 t only. **VU*** Vane motorised rigid universal trolley (flat or tapered beam) 1,5 to 8 t. **VE*** Vane motorised rigid trolley (flat beam) 12 to 25 t. **VN*** Vane motorised rigid trolley (tapered beam) 12 to 25 t. **RU*** Gear motorised rigid universal trolley (flat or tapered beam) 6 and 8 t. **RE*** Gear motorised rigid trolley (flat beam) 12 to 25 t. **RN*** Gear motorised rigid trolley (tapered beam) 12 to 25 t. * *Add the letter "L" for low headroom trolley (e.g. LVU or LRU)* * *Add the letter "R" for rack & pinion configuration (e.g. RER). Only available for gear motor trolleys, or for LC2A015SI, LC2A030DI, LC2A040SI with vane motor.*	**3M2** Standard: 3 m height of lift and 2 m of control **XMX** Specify heights in meters	**A** Standard chain bucket. **B** Large chain bucket. **C** Extra large chain bucket. **D** XXL chain bucket. **J** Airline accessories (1) Specify J1: Filter, J2: Lubricator J3: Regulator or numerical combination. **K** Cast iron pendent. **LM** Low temperature design (-20°C DNV). Includes 3.1 material traceability certificates. **M** Material traceability certificate as per EN 10204 3.1 on main load bearing part. **P** Marine paint 150µ. **QZ** Offshore paint 290µ including sandblasting. **T1** Spark resistance (2) package (ATEX zone 1) **W** Witness test. Specify W1 for ABS or W2 for DNV or W3 for LRS or W4 for client witness of load test. **-E** Compliance with the European machinery directive.

(1) For protection during shipment and due to the wide range of installation variables, the airline accessories are shipped loose for client installation.

(2) Option T1 includes the following:
For the hoist: *Cast iron pendent and bronze coated bottom hook assembly*
For the trolley: *Solid bronze wheels (all trolleys).*
In addition for motorised trolleys, pinion drive in solid bronze or stainless steel and cast iron pendent.
In addition for geared trolleys, bronze coated hand wheel with brass hand chain guide.

LC2A Series from 12.5 to 100 t capacity

L C 2 A 7 5 0 T I P 2 C 1 0 M 9 A P – E

Series	Load capacity	Control	Suspension	Lift & control	Options
LC2A LIFTCHAIN AIR SERIES from 12.5 to 50 t. **LCA** LIFTCHAIN AIR SERIES 75 and 100 t.	**125SI** 12.5 t, single fall **250DI** 25 t, double falls **37.5TI** 37.5 t, triple falls **500QI** 50 t, quadruple falls **750TI** 75 t, triple falls **1000QI** 100 t, quadruple falls	**P2** 1 motor pendent **P3** 2 motor pendent (for hoist with motorised trolley)	**C** Hook-mount **VN*** Vane motor + braked trolley for tapered beam (up to 50 t). **VE*** Vane motor + braked trolley for flat beam. (up to 50 t). **RN*** Motorised (gear motor) + braked trolley for tapered beam (all models). **RE*** Motorised (gear motor) + braked trolley for flat beam (all models). * *Add the letter "R" for rack & pinion configuration (e.g. RER).*	**3M2** Standard: 3 m height of lift and 2 m of control **XMX** Specify heights in meters	**A** Standard chain bucket. **B** Large chain bucket. **J** Airline Accessories (1) – Specify J1: Filter, J2: Lubricator, J3: Regulator or numerical combination. **K** Cast iron pendent. **LM** Low temperature design (-20°C DNV). Includes 3.1 material traceability certificates. **M** Material traceability certificate as per EN 10204 3.1 on main load bearing part. **P** Marine paint 150µ. **QZ** Offshore paint 290µ including sandblasting. **T1** Spark resistance (2) package (ATEX zone 1). **W** Witness test. Specify W1 for ABS or W2 for DNV or W3 for LRS or W4 for client witness of load test. **-E** Compliance with the European machinery directive.

Hook-Mount Models – 1.5 to 25 t capacity (except model 25t double falls)

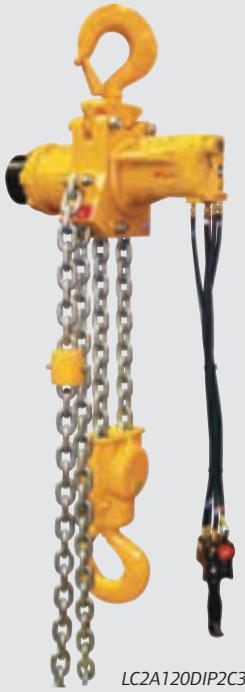

LC2A120DIP2C3M2-E

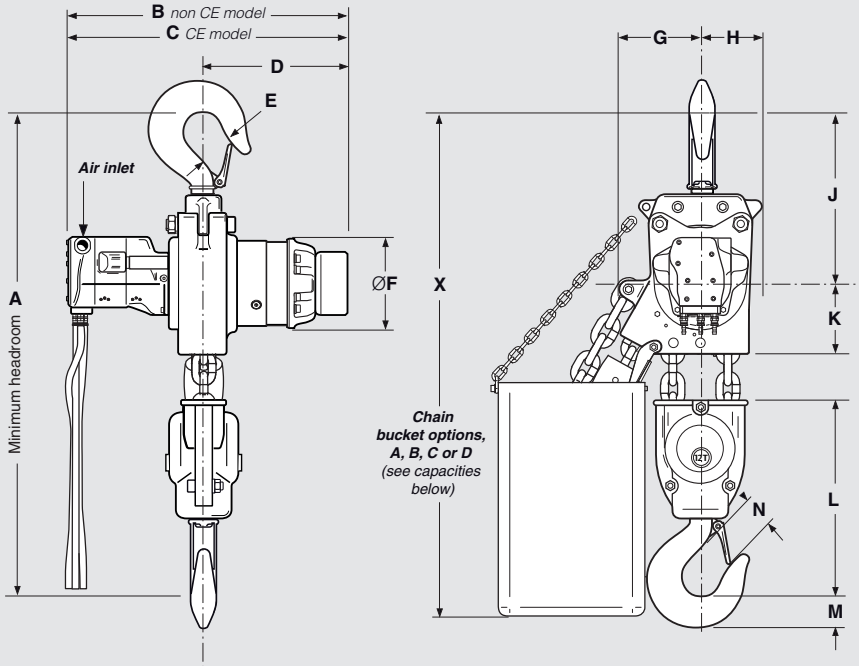

Dimensions are subject to change without notice. Please contact Client Services for certified prints.

Hoist dimensions in mm

Model number	A	B	C	D	E	F	G	H	J	K	L	M	N	Air Inlet Ø
LC2A015SI	409	385	410	210	27	137	112	68	173	90	146	30	27	3/4" BSP
LC2A030DI	549	385	410	210	35	137	112	68	202	90	257	37	35	3/4" BSP
LC2A040SI	580	580	606	297	35	192	183	71	264	127	190	37	35	1" BSP
LC2A060QI	653	448	474	236	43	137	112	68	266	90	296	50	43	3/4" BSP
LC2A060SI	717	605	630	310	43	192	233	75	350	139	228	50	43	1" BSP
LC2A080DI	807	580	606	297	53	192	140	115	307	127	373	60	53	1" BSP
LC2A120DI	945	605	630	310	58	192	175	133	370	152	424	67	58	1" BSP
LC2A125SI	865	725	816	265	58	—	276	194	368	226	296	67	58	1 1/4" BSP (1)
LC2A180TI	1063	724	750	386	78	192	195	98	427	152	484	80	78	1" BSP
LC2A250QI	1156	724	750	367	87	192	175	118	474	152	530	96	87	1" BSP

(1) 1 1/2" air inlet with CE package.

Chain bucket capacity and height – A, B, C or D options

	Chain bucket, type **A**			Chain bucket, type **B**			Chain bucket, type **C**			Chain bucket, type **D**		
Hoist model	Bucket material	Corresponding height of lift capacity (m)	Height "X" (mm)	Bucket material	Corresponding height of lift capacity (m)	Height "X" (mm)	Bucket material	Corresponding height of lift capacity (m)	Height "X" (mm)	Bucket material	Corresponding height of lift capacity (m)	Height "X" (mm)
LC2A015SI	Canvas	12	628	Canvas	30	728	Canvas	60	828	Metal	80	TBA
LC2A030DI	Canvas	6	657	Canvas	15	757	Canvas	30	857	Metal	40	TBA
LC2A040SI	Canvas	12	847	Canvas	25	947	Metal	40	1107	Metal	60	1147
LC2A060QI	Canvas	3	721	Canvas	7.5	821	Canvas	15	921	Metal	20	TBA
LC2A060SI	Canvas	12	1065	Metal	26	1265	Metal	40	1265	Metal	60	1445
LC2A080DI	Canvas	6	890	Canvas	12.5	990	Metal	20	1150	Metal	30	1190
LC2A120DI	Canvas	6	1085	Metal	13	1285	Metal	20	1285	Metal	30	1465
LC2A125SI	Metal	30	475	Metal	60	800	—	—	—	—	—	—
LC2A180TI	Canvas	4	1142	Metal	8.5	1342	Metal	13	1342	Metal	20	1522
LC2A250QI	Canvas	3	1189	Metal	6.5	1389	Metal	10	1389	Metal	15	1569

Liftchain® Series Air Chain Hoists
1.5 - 100 t Load Capacity

Hook-Mount Models – 25 to 100 t capacity (except model 25t with 4 falls)

LC2A500QIP2C3M2

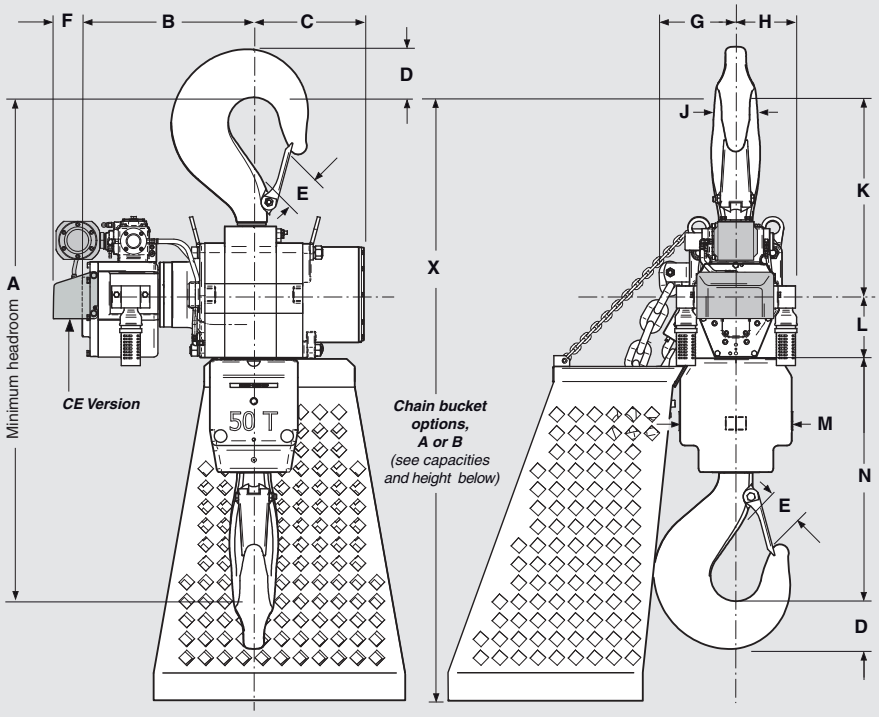

Dimensions are subject to change without notice. Please contact Client Services for certified prints.

Hoist dimensions in mm

Model number	A	B	C	D	E	F	G	H	J	K	L	M	N	Air Inlet Ø (1)
LC2A250DI	1235	460	265	94	87	91	276	194	80	459	205	276	572	1 1/4" BSP
LC2A375TI	1484	514	373	132	103	91	229	194	125	565	205	298	714	1 1/4" BSP
LC2A500QI	1590	541	346	150	118	91	229	194	140	622	205	352	763	1 1/4" BSP
LCA750TI	2338	557	718	190	160	75	566	304	180	973	310	420	1055	1 1/4" BSP
LCA1000QI	2455	594	682	250	184	75	566	304	200	1030	314	490	1111	1 1/4" BSP

(1) 1 1/2" air inlet with CE package.

Metal Chain bucket (A or B options) – Capacity and height

	Chain bucket, type A		Chain bucket, type B	
Hoist model	Corresponding height of lift (m)	Height "X" (mm)	Corresponding height of lift (m)	Height "X" (mm)
LC2A250DI	15	840	30	1055
LC2A375TI	10	840	20	1055
LC2A500QI	7.5	840	15	1055
LCA750TI	10	2462	20	3052
LCA1000QI	7.5	2462	15	3052

Chain containers are a simple and economical way of capturing the load chain and preventing it from interfering with the load, hoist control hoses, or other objects.

A variety of standard sizes are available and we can provide quotations for containers for longer lifts or where space restrictions may require custom design.

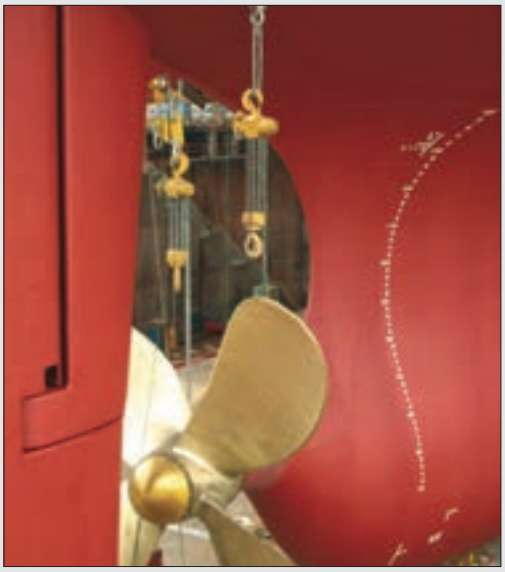

Trolley Mount Models – 1.5 to 25 t capacity (except model 25t double falls)

LC2A250QIP3VE

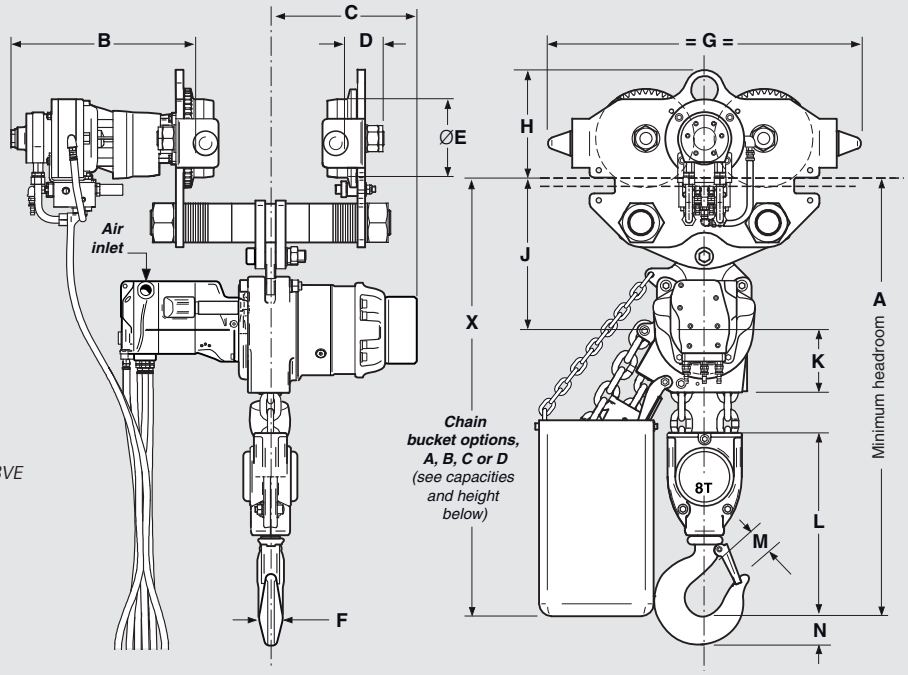

Dimensions are subject to change without notice. Please contact Client Services for certified prints.

Hoist / Trolley dimensions in mm

Model number	A	B	C	D	E	F	G	H	J	K	L	M	N	Air Inlet Ø
LC2A015SI	480	190	210	60	120	—	436	155	244	90	146	27	30	3/4" BSP
LC2A030DI	592	190	210	60	120	—	436	155	244	90	257	35	37	3/4" BSP
LC2A040SI	590	284	300	60	120	—	436	147	273	127	190	35	37	1" BSP
LC2A060QI	702	290	250	82	160	—	640	220	315	90	296	43	50	3/4" BSP
LC2A060SI	730	290	310	82	160	—	640	220	350	152	228	43	50	1" BSP
LC2A080DI	815	380	300	82	160	—	640	220	313	127	373	53	60	1" BSP
LC2A120DI	995	410	310	91	160	—	622	220	420	152	424	58	67	1" BSP
LC2A125SI	1000	313	265	87	160	57	622	220	498	201	296	58	67	1 1/4" BSP (1)
LC2A180TI	1195	360	390	125	225	—	790	270	558	152	484	78	80	1" BSP
LC2A250QI	1240	360	370	125	225	—	790	270	558	152	530	87	96	1" BSP

(1) 1 1/2" air inlet with CE package.

Chain bucket capacity and height – A, B, C or D options

	Chain bucket, type A			Chain bucket, type B			Chain bucket, type C			Chain bucket, type D		
Hoist model	Bucket material	Corresponding height of lift capacity (m)	Height "X" (mm)	Bucket material	Corresponding height of lift capacity (m)	Height "X" (mm)	Bucket material	Corresponding height of lift capacity (m)	Height "X" (mm)	Bucket material	Corresponding height of lift capacity (m)	Height "X" (mm)
LC2A015SI	Canvas	12	700	Canvas	30	800	Canvas	60	900	Metal	80	TBA
LC2A030DI	Canvas	6	712	Canvas	15	812	Canvas	30	912	Metal	40	TBA
LC2A040SI	Canvas	12	856	Canvas	25	956	Metal	40	1116	Metal	60	1156
LC2A060QI	Canvas	3	769	Canvas	7.5	869	Canvas	15	969	Metal	20	TBA
LC2A060SI	Canvas	12	1065	Metal	26	1265	Metal	40	1265	Metal	60	1445
LC2A080DI	Canvas	6	896	Canvas	12.5	996	Metal	20	1156	Metal	30	1196
LC2A120DI	Canvas	6	1135	Metal	13	1335	Metal	20	1335	Metal	30	1515
LC2A125SI	Metal	30	1564	Metal	60	1779	—	—	—	—	—	—
LC2A180TI	Canvas	4	1273	Metal	8.5	1473	Metal	13	1473	Metal	20	1653
LC2A250QI	Canvas	3	1273	Metal	6.5	1473	Metal	10	1473	Metal	15	1653

Trolley Mount Models – 25 to 100 t capacity (except model 25t with 4 falls)

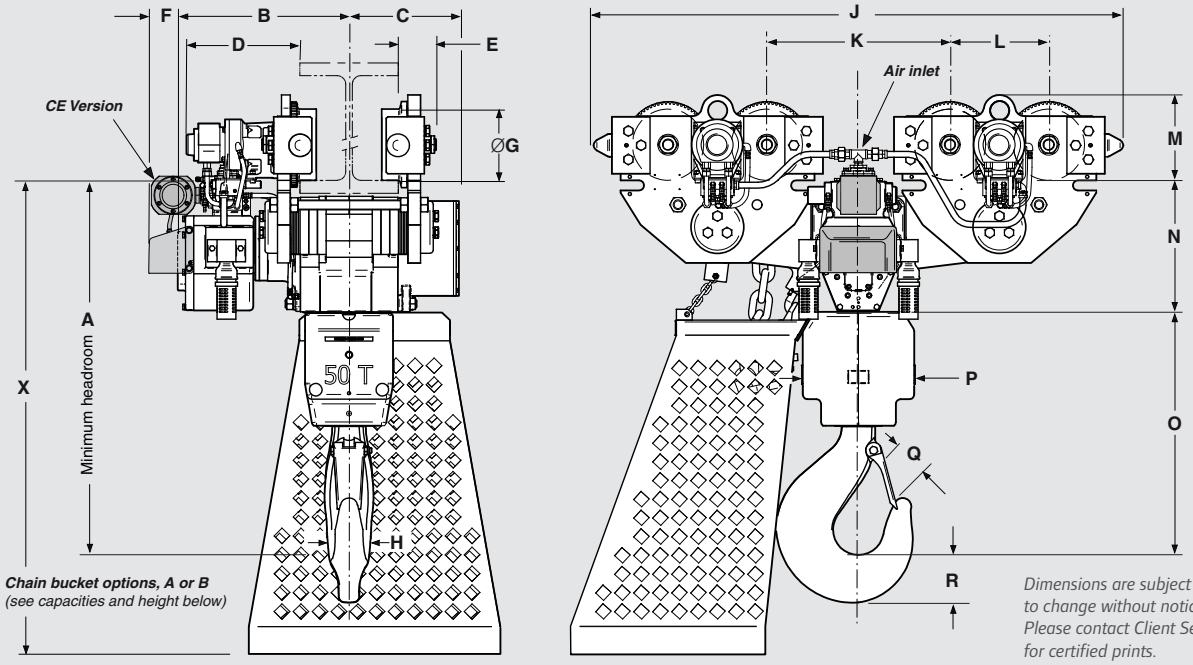

Dimensions are subject to change without notice. Please contact Client Services for certified prints.

Hoist / Trolley dimensions in mm

Model number	A	B	C	D	E	F	G	H	J	K	L	M	N	O	P	Q	R	Air Inlet Ø (1)
LC2A250DI	990	460	265	313	87	91	160	84	1362	500	240	220	411	572	276	87	120	1 1/4" BSP
LC2A375TI	1134	514	373	358	121	91	225	125	1672	578	312	270	416	714	298	103	140	1 1/4" BSP
LC2A500QI	1182	541	346	358	121	91	225	140	1672	578	312	270	416	763	352	118	160	1 1/4" BSP
LCA750TI	1880	700	553	550	121	NA	225	150	3370	NA	312	270	790	1055	420	153	190	1 1/4" BSP
LCA1000QI	1936	700	553	550	121	NA	225	150	3370	NA	312	270	790	1111	490	184	250	1 1/4" BSP

(1) 1-1/2" air inlet with CE package.

Metal Chain bucket (A or B options) – Capacity and height

	Chain bucket, type A		Chain bucket, type B	
Hoist model	Corresponding height of lift (m)	Height "X" (mm)	Corresponding height of lift (m)	Height "X" (mm)
LC2A250DI	15	1276	30	1491
LC2A375TI	10	1281	20	1496
LC2A500QI	7.5	1281	15	1496
LCA750TI	10	1980	20	2555
LCA1000QI	7.5	1980	15	2555

Chain containers are a simple and economical way of capturing the load chain and preventing it from interfering with the load, hoist control hoses, or other objects.

A variety of standard sizes are available and we can provide quotations for containers for longer lifts or where space restrictions may require custom design.

LC2A375TIP3RN3M2-E

Low Headroom Models – 1.5 to 25 t capacity

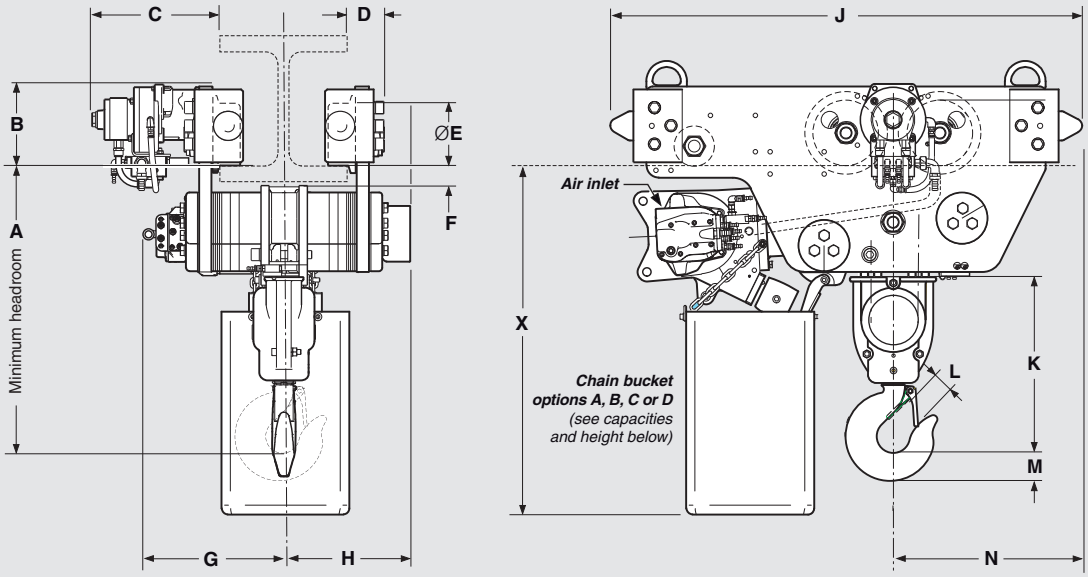

Dimensions are subject to change without notice. Please contact Client Services for certified prints.

Hoist / Trolley dimensions in mm

Model number	A	B	C	D	E	F	G	H	J	K	L	M	N	Air Inlet Ø
LC2A015SIP3L	275	150	171	63	120	30	220	220	694	147	27	30	233	3/4" BSP
LC2A030DIP3L	386	150	171	63	120	30	220	220	694	257	32	37	202	3/4" BSP
LC2A060QIP3L	465	179	283	78	160	50	265	176	1002	288	43	50	366	3/4" BSP
LC2A060SIP3L	475	195	318	101	160	50	348	311	1164	228	43	50	409	1" BSP
LC2A080DIP3L	590	179	283	78	160	50	337	297	1002	383	53	60	366	1" BSP
LC2A120DIP3L	670	195	318	101	160	50	348	311	1164	424	58	67	466	1" BSP
LC2A180TIP3L	730	248	371	120	225	50	272	387	1164	484	78	80	447	1" BSP
LC2A250QIP3L	775	248	371	120	225	50	405	254	1164	530	87	96	466	1" BSP

Chain bucket capacity and height – A, B, C or D options

	Chain bucket, type **A**			Chain bucket, type **B**			Chain bucket, type **C**			Chain bucket, type **D**		
Hoist model	Bucket material	Corresponding height of lift capacity (m)	Height "X" (mm)	Bucket material	Corresponding height of lift capacity (m)	Height "X" (mm)	Bucket material	Corresponding height of lift capacity (m)	Height "X" (mm)	Bucket material	Corresponding height of lift capacity (m)	Height "X" (mm)
LC2A015SIP3L	Canvas	12	566	Canvas	30	694	—	—	—	—	—	—
LC2A030DIP3L	Canvas	6	566	Canvas	15	694	—	—	—	—	—	—
LC2A060QIP3L	Canvas	3	590	Canvas	8	690	Canvas	15	790	Metal	20	TBA
LC2A060SIP3L	Canvas	12	860	Metal	26	1060	Metal	40	1060	Metal	60	1240
LC2A080DIP3L	Canvas	6	760	Metal	13	860	Metal	20	1060	Metal	30	1240
LC2A120DIP3L	Canvas	6	860	Metal	13	1060	Metal	20	1060	Metal	30	1240
LC2A180TIP3L	Canvas	4	860	Metal	8	1060	Metal	12	1060	Metal	20	1240
LC2A250QIP3L	Canvas	3	860	Metal	6	1060	Metal	10	1060	Metal	15	1240

Ultra-Low Headroom chain hoists up to 100 t capacity (ULBS Series) are available upon request. See description on page 53.

Liftchain® Series Air Chain Hoists

1.5 - 100 t Load Capacity

LC2A080DSMP2C

Dimensions are subject to change without notice. Please contact Client Services for certified prints.

"Miner" Series – 1.5 to 12 t capacity

LC2A015SM
LC2A040SM
LC2A060SM

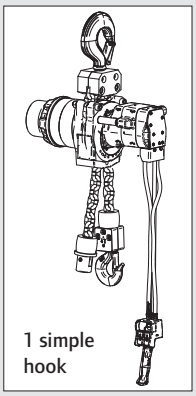

1 simple hook

LC2A030DM
LC2A080DM
LC2A120DM

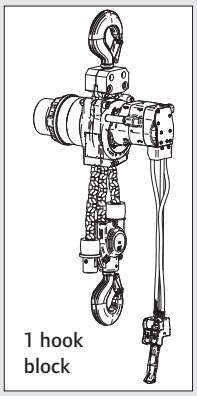

1 hook block

LC2A015SSM
LC2A040SSM
LC2A060SSM

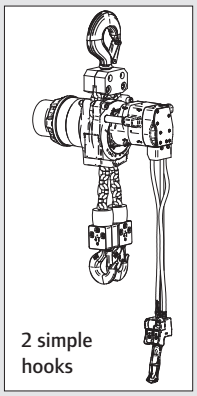

2 simple hooks

LC2A030DSM
LC2A080DSM
LC2A120DSM

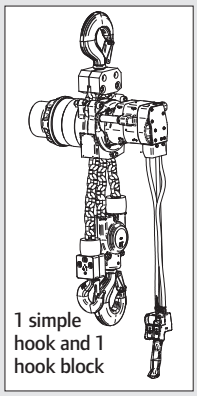

1 simple hook and 1 hook block

Dimensions with simple fall load hook

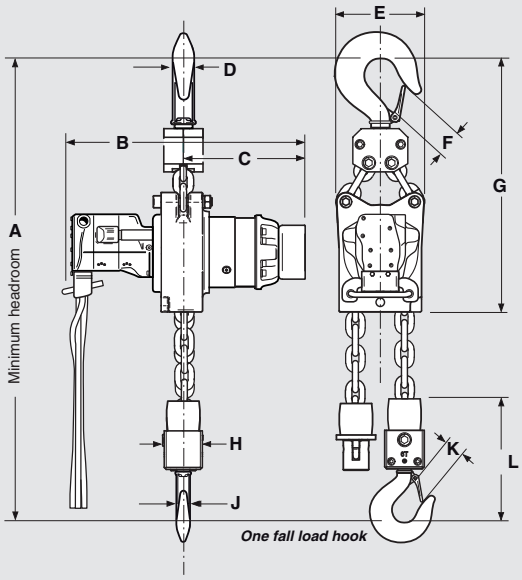

Dimensions with simple and double fall load hooks

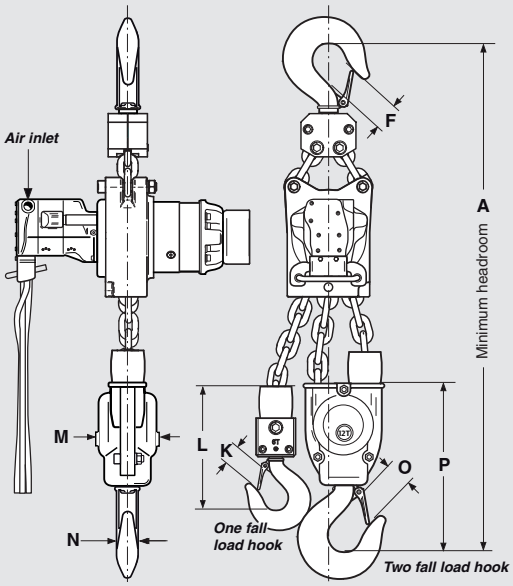

Hoist dimensions in mm (CE models)

Model number	A	B	C	D	E	F	G	H	J	K	L	M	N	O	P	Air Inlet Ø
LC2A015SM	610	418	210	29	154	35	377	62	29	35	233	—	—	—	—	3/4" BSP
LC2A015SSM	610/610	418	210	29	154	35	377	62	29	35	233	—	—	—	—	3/4" BSP
LC2A030DM	685	418	210	29	154	35	377	—	—	—	—	94	29	35	307	3/4" BSP
LC2A030DSM	610/685	418	210	29	154	35	375	62	29	35	233	94	29	35	307	3/4" BSP
LC2A040SM	793	620	306	43	210	53	533	77	29	35	260	—	—	—	—	1" BSP
LC2A040SSM	793/793	620	306	43	210	53	533	77	29	35	260	—	—	—	—	1" BSP
LC2A060SM	964	642	317	52	227	58	644	97	37	43	320	—	—	—	—	1" BSP
LC2A060SSM	964/964	642	317	52	227	58	644	97	37	43	320	—	—	—	—	1" BSP
LC2A080DM	976	620	306	43	210	53	533	—	—	—	—	113	43	53	443	1" BSP
LC2A080DSM	793/976	520	306	43	210	53	533	77	29	35	260	113	43	53	443	1" BSP
LC2A120DM	1160	642	317	52	227	58	644	—	—	—	—	156	52	58	516	1" BSP
LC2A120DSM	952/1160	642	317	52	227	58	644	97	37	43	320	156	52	58	516	1" BSP

Ingersoll Rand ARO-Flo Series

These filters, regulators, lubricators and FRL combinations are designed to keep your air supply in top condition, as well as enable your hoist to operate at its peak performance.

Features

- Robust cast aluminium body.
- High-flow filter element with 5-micron filtration.
- Automatic drain.
- Reinforced metal bowls with sight glass.

FRL combinations 3/8" to 1":

- Regulated pressure 0-9.7 bar, max. inlet pressure 17 bar. Flush mount gauge and T-shape wall mount brackets included.

Separated filter, regulator and lubricator 1 1/4" and 1 1/2":

- Regulated pressure 0-8.5 bar, max. inlet pressure 20.7 bar. Gauge and connection nipples to be ordered separately.

C383E1-811
3/4" combined FRL

C384F1-811
1" combined FRL

F355G1-411
1 1/4" filter

R375G1-100
1 1/4" regulator

L365G1-110
1 1/4" lubricator

104502 gauge

ARO-Flo Series equipment is exempt from the EU Directives 2002/95/EC (CE compliance), and 94/9/EC (ATEX 95).
ARO-Flo Series is Silicon free and meets 2002/95/EC (RoHS compliance).

Hoist model	Hoist air inlet size	FRL size	FRL combination part no.	Filter part no.	Regulator part no.	Gauge part no.	Lubricator part no.	Nipple part no. (1)
For CLK, MLK and LC2A Air Hoists Series								
CLK Series...	3/8" NPT	3/8" BSP	C382C1-811	—	—	—	—	—
MLK Series	1/2" NPT	1/2" BSP	C383D1-811					
LC2A015S...	3/4" BSP	3/4" BSP	C383E1-811					
LC2A030D...	3/4" BSP							
LC2A040S...	1" BSP	1" BSP	C384F1-811					
LC2A060Q...	3/4" BSP	3/4" BSP	C383E1-811					
LC2A060S...	1" BSP	1" BSP	C384F1-811					
LC2A080D...	1" BSP							
LC2A120D...	1" BSP							
LC2A125S...	1 1/4" BSP	1 1/4" BSP	—	F355G1-411	R375G1-100	104502	L365G1-110	38751038
LC2A180T...	1" BSP	1" BSP	C384F1-811	—	—	—	—	—
LC2A250Q...	1" BSP							
LC2A250D...	1 1/4" BSP	1 1/4" BSP	—	F355G1-411	R375G1-100	104502	L365G1-110	38751038
LC2A375T...	1 1/4" BSP							
LC2A500Q...	1 1/4" BSP							
LCA750T...	1 1/4" BSP							
LCA1000Q...	1 1/4" BSP							

(1) Two nipples have to be ordered to assemble the filter / regulator / lubricator module.

BOP Handling Systems

For over 30 years Ingersoll Rand has designed, manufactured and serviced hundreds of blowout preventer handling systems for all the major drilling contractors and oil companies in the industry.

Our experience with this complex and critical lifting application enables us to provide the type of equipment, engineering support, and certifications that these projects require.

Our commitment to safety and quality combined with our long experience with difficult lifting applications allows us to provide our clients with the safest and most cost-effective solutions possible.

Ingersoll Rand

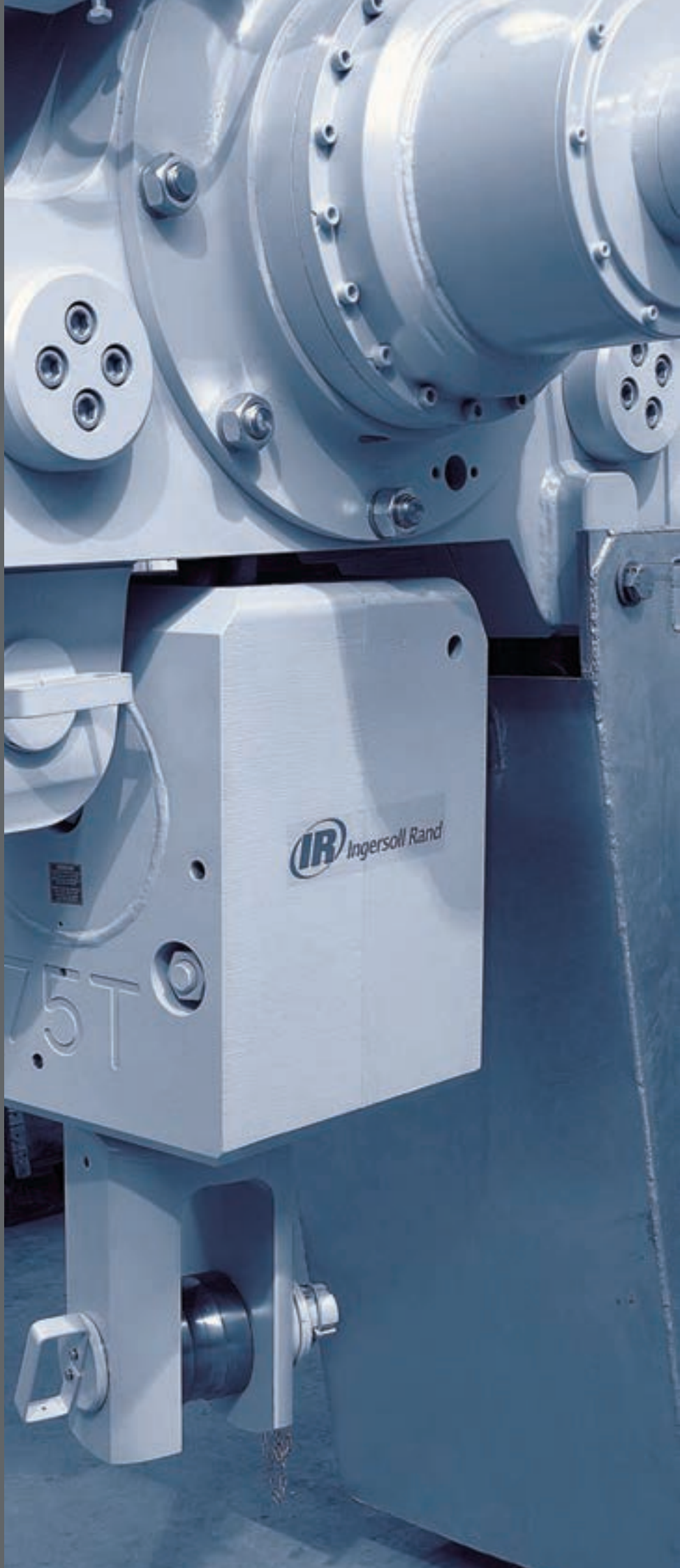

BOP Handling Systems
25 - 200 t Load Capacity

Our BOP Handling Systems are designed to meet or exceed the specifications of one or more of the following regulatory bodies; the Norwegian Petroleum Directorate (NPD), UK HSE, Lloyds Register of Shipping (LRS), Det Norske Veritas (DNV), and American Bureau of Shipping (ABS) for the oilwell drilling industry.

All Ingersoll Rand BOP handling systems are designed and built in ISO9001 certified factories.

They are comprised of two trolley-mounted hoists; each of which is rated at one-half the complete system capacity.

Features

- 5:1 design factor combined with all steel and cast iron construction to withstand the brutal environmental and mechanical challenges of the job.
- Automatic multi-disc brakes that engage instantly the moment the controls are released.
- High efficiency planetary gear boxes that are fully sealed to exclude contaminants.
- Space saving modular designs require no deck space, offer low headroom and improved end approach. Ultra-low headroom models are available for applications with severe envelope restrictions.
- Choice between two types of pneumatic motor, including compact gear type motor (**BS Series** BOP handling systems) and high-torque radial piston motor (**BHS Series** BOP handling systems). Air motors provide built-in overload protection since they will stall without damaging hoist.
- Smooth, precise and safe load control with variable speed pendent control.
- Rugged corrosion-resistant load chain in 16, 22 and 32 mm sizes with greater elongation and therefore, with more resistance to shock loading. The large links provide for easier external inspection, excellent resistance to abrasion, and will last indefinitely when properly maintained.
- True vertical lift which enhances load control characteristics and safety.
- Articulated trolleys accommodate limited side pulling as BOP stack is being lifted.

Engineered options

- Rack and pinion trolley drive option for positive traction and improved horizontal load control.
- Severe duty packages available for cold weather, marine and explosion-proof environments, including ATEX.
- Remote control pendents and consoles.
- Spark and corrosion resistant components.
- Festooning systems.
- Trolleys for custom fabricated beams.
- Clevis and shackle bottom block assemblies.
- Low pressure 4 bar (57 psi) applications.

Certificate No. FM53539

Certificate No. QUAL/1991/309e

CE marked models are compliant with the latest European machinery directive No 2006/42/EC and the European standard for Power Driven Hoists EN 14492-2.
These models include as standard an emergency stop on pendent and main air shut-off valve as per EN 418 standard, an overload protection and a CE declaration of conformity.

The BS and BHS BOP handling systems are particularly suitable for use in potentially explosive atmospheres.
In their standard design, they are classified as equipment category 3 for applications in zone 2 as per ATEX 94/9/CE Directive (ATEX marking **Ex II 3 GD c IIB 135°C X**).
For more hazardous areas such as zone 1, they are offered with a special spark resistant package (ATEX marking **Ex II 2 GD c IIB 135°C X**).

BOP Handling Systems

25 - 200 t Load Capacity

BS150LCA3P3
(one 75 t hoist shown)

BS Series

Specific Features

All models meet the requirements of the European standards FEM 9.511 and FEM 1001 for lifting as well the U.S. standard ASME/ANSI B30.7.

- Gear type air motor – hoist and trolley.
- 5:1 design factor.
- Standard design temperature TD = -20°C for BS25LC2A2 to BS50LC2A4. TD = -10°C for other models.
- All steel/cast iron construction.
- Automatic fail safe multi disc, motor brake on hoist and trolley
- Articulated trolley allows limited side pulling operations
- Fully enclosed planetary gear box
- Compact modular design
- Corrosion resistant load chain
- 9 m height of lift standard on all models
- Bottom block mounted on bearing with external lubrication point and water drain
- PHS progressive piloted pendent control - 9 m length as standard.
- Limit switch for upper and lower over-travel protection.
- Lifting lugs for easy installation.
- Filter-lubricator-regulator air preparation package mounted on unit.
- Corrosion resistant marine 812 finish paint.
- Galvanised steel chain container.
- Trolley guide rollers, rubber bumpers, and rail sweeps.
- Manufacturer test certificate and maintenance manual.
- Exhaust mufflers.

Gear Motor

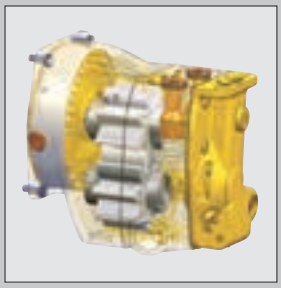

Ingersoll Rand gear air motor is characterised by:

- *A unique design with only two moving parts, making it ideal for severe applications in hot, cold, dusty, dirty, explosive and wet conditions.*
- *A reduced sensitivity to long storage period or long period with no use.*
- *A low air consumption.*
- *A variable speed control offering a precision spotting control at slow speeds.*

WARNING: Standard hoist / trolley combinations purchased for BOP handling will void the warranty. They are not designed for this type of application.

BS Series Specifications

BS BOP handling systems are comprised of two trolley-mounted hoists. The total system capacity corresponds to the addition of the rated capacity of both hoists.

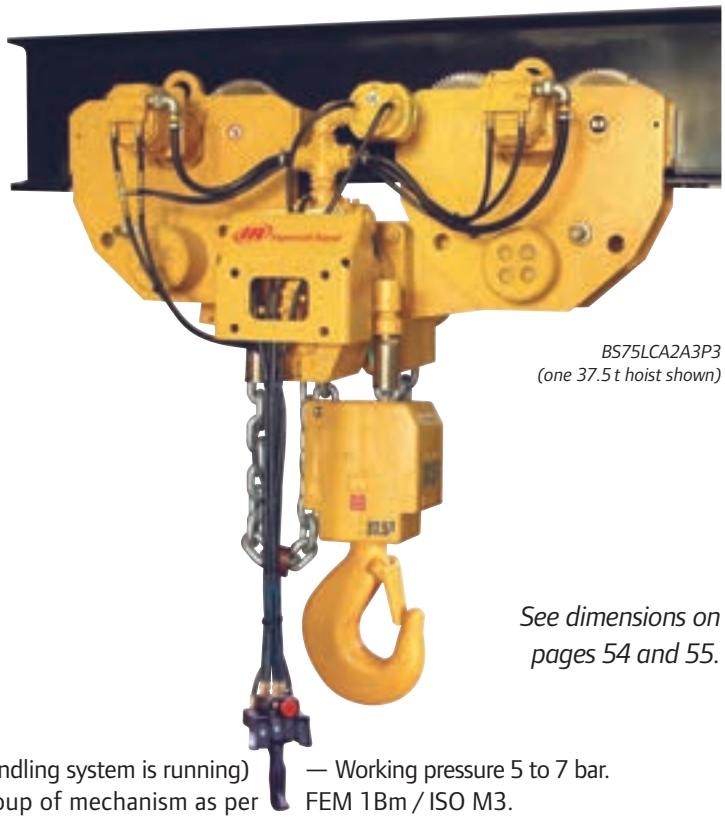

BS75LCA2A3P3
(one 37.5 t hoist shown)

See dimensions on pages 54 and 55.

Specifications at 6.3 bar dynamic pressure (when BOB handling system is running) — Working pressure 5 to 7 bar.
As per European standard EN range 14492-2 – Group of mechanism as per FEM 1Bm / ISO M3.

System model number	System capacity (t)	Falls of chain per hoist	Min. headroom (mm)	Lifting speed at rated load (m/min)	Lowering speed at rated load (m/min)	Motor power per hoist (hp)	Air cons. per hoist (m^3/min)	Sound level (1) (dbA)	System weight (2) (kg)	Chain size (mm)	Chain weight/ 1m extra lift (kg)
BS Series BOP Handling Systems – HOIST Sub-Assembly											
BS25LC2A2…	25	2	1125	1.1	1.3	5.5	5.0	79	800	16 x 45	11.4
BS30LC2A3…	30	3	1195	0.8	1.0	5.5	5.2	79	970	16 x 45	17.1
BS36LC2A3…	36	3	1195	0.7	0.9	5.5	5.2	79	970	16 x 45	17.1
BS40LC2A4…	40	4	1240	0.5	0.6	5.5	5.0	79	1040	16 x 45	23.0
BS50LC2A4…	50	4	1240	0.5	0.6	5.5	5.0	79	1040	16 x 45	23.0
BS50LC2A2…	50	2	1048	1.6	2.5	10	12	93	1130	22 x 66	21.4
BS75LC2A3…	75	3	1190	1.1	2.0	10	12	93	4000	22 x 66	32.1
BS100LC2A4…	100	4	1156	0.8	1.5	10	12	93	4400	22 x 66	42.8
BS150LCA3…	150	3	1880	0.4	0.7	10	12	93	9440	32 x 90	73.5
BS200LCA4…	200	4	1960	0.3	0.5	10	12	93	9990	32 x 90	98.0

System model number	Number of wheels per hoist	Flange adjustment (mm)	Wheel tread diameter (mm)	Wheel loading per pair (kg)	Min. inside curve radius (m)	Number of motors per trolley	Trolley air consumption per hoist (m^3/min)	Max. ravelling speed at rated load (3) (m/min)
BS Series BOP Handling Systems – TROLLEY Sub-Assembly								
BS25LC2A2…	4	131 - 310	160	6250	3	1	1.9	12
BS30LC2A3…	4	131 - 310	225	7500	5	1	1.9	12
BS36LC2A3…	4	131 - 310	225	9000	5	1	1.9	12
BS40LC2A4…	4	131 - 310	225	12500	5	1	1.9	12
BS50LC2A4…	4	131 - 310	225	12500	5	1	1.9	12
BS50LC2A2…	8	160 - 310	160	6250	105	2	3.8	12
BS75LC2A3…	8	160 - 310	225	9375	105	2	3.8	12
BS100LC2A4…	8	160 - 310	225	12500	105	2	3.8	12
BS150LCA3…	16	160 - 310	225	9375	130	4	7.6	12
BS200LCA4…	16	160 - 310	225	12500	130	4	7.6	12

(1) Sound pressure levels are measured per European standard EN 14492-2.
(2) Weight of the complete system (2 hoists) with standard height of lift (9 m) and standard length of control (9 m).
(3) In Rack & Pinion configuration, the trolley speed is divided by 2.

BS Series - Standard Equipment & Options

In standard version, BS Series BOP handling systems are fitted with the following equipment:

- Articulated trolley hoist allows limited side pulling operations.
- 2 motor PHS piloted pendents (one per combined hoist/trolley).
- Corrosion resistant load chain with 9 m height of lift as standard.
- Limit switch for upper and lower over-travel protection.
- Corrosion resistant Marine 812 finish paint.
- Galvanised steel chain container.
- Filter-Lubricator air preparation package mounted on unit.
- Trolley guide rollers, rubber bumpers and rail sweeps.
- Exhaust mufflers.
- Manufacturer test certificate and maintenance manual.

Articulated trolley hoist

Integrated limit switches

Galvanised steel container

Air preparation package

In CE compliant version, BS Series BOP handling systems are fitted with the additional following equipment:

- Built-in overload protection.
- Emergency stop button on pendent, acting on main air shut off valve.
- CE declaration of conformity.

Rubber bumpers & rail sweeps

PHS pendent with emergency stop

Overview of some available options

Rack & pinion drive
For positive traction. On BS series with rack & pinion configuration, the standard trolley speed is divided by 2. The racks have to be ordered separately and have to be welded on the beam by the customer.

Clevis and shackle attachment
Fitted in lieu of the bottom hook. The clevis can be configured according to specific criteria on request.

Spark resistant package, option T1, for ATEX zone 1
The T1 spark resistant option is designed for applications in zone 1 as per ATEX 94/9/CE Directive. It includes as standard:
- **On the trolleys**, solid bronze wheels and pinion drive in solid bronze or stainless steel. Stainless steel pins and fasteners (10 mm and smaller) and 20µ zinc plated fasteners (11 mm and larger).
- **On the hoists**, bronze coated bottom hook assembly and cast iron pendent (for control of both hoist and trolley). Stainless steel pins and fasteners (10 mm and smaller) and 20µ zinc plated fasteners (11 mm and larger).

Rack & pinion drive

Clevis & shackle attachment

Bronze coated bottom hook assembly

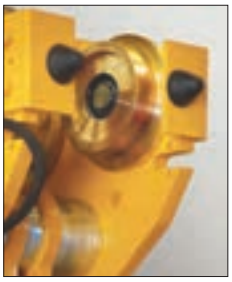
Solid bronze wheels on trolley

BS Series Ordering Menu

To order your BOP handling system, specify complete model number code as shown below. Also specify beam size, type and flange width.

B S 1 0 0 L C 2 A 4 P 3 E R 9 M 9 T 1 – E

Series / Load capacity		Chain falls	Control	Beam type	Lift & control	Options
BS25LC2A 2 x 12.5 t **BS30LC2A** 2 x 15 t **BS36LC2A** 2 x 18 t **BS40LC2A** 2 x 20 t **BS50LC2A** 2 x 25 t **BS75LC2A** 2 x 37.5 t **BS100LC2A** 2 x 50 t **BS150LCA** 2 x 75 t **BS200LCA** 2 x 100 t	**2** 2 falls per hoist (available for 25 and 50 t models) **3** 3 falls per hoist (available for 30, 36, 75 and 150 t models) **4** 4 falls per hoist (available for 40, 50, 100 and 200 t models)	**P3** 2 motor PHS pendent	**E** Flat beam* **N** Tapered beam* ** Add the letter "R" for Rack & Pinion configuration (e.g. ER)*	**9M9** Standard: 9 m height of lift and 9 m of control **XMX** Specify heights in meters	**LM** Low temperature design (TD = -20°C). Includes 3.1 material traceability certificates. **M** 3.1 material traceability certificates (1) **N** Clevis instead of bottom hook **QZ** Offshore paint including sandblast **T1** Spark resistant package for zone 1 (see details on previous page) **W1** ABS witness test **W2** DNV witness test **W3** LRS witness test **W4** Client witness of load test **-E** Compliance with the European machinery directive.

(1) Material traceability certificates according to EN 10204 (Ex DIN 50049) 3.1 on load bearing parts.

Ultra-Low Headroom Versions

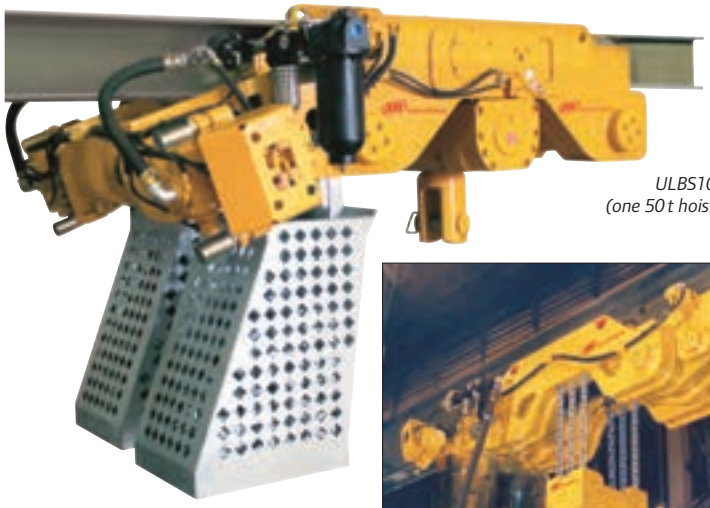

ULBS100LC2A4 (one 50 t hoist shown)

ULBS150LCA4

The BS Series BOP handling systems can be designed in ultra-low headroom version for applications requiring a very limited working height — range of capacities from 50 to 200 t.

The minimum headroom of these products is only slightly greater than the size of the bottom hook assembly !

Please consult us for further details on description and specifications.

Note: the design of the ULBS Series does not allow an articulated connection between the trolley and hoist.

See dimensions on page 55.

Specifications at 6.3 bar dynamic pressure (when BOB handling system is running) — Working pressure 5 to 7 bar.

Model number	System capacity (t)	Falls of chain per hoist	Min. headroom (mm)	Lifting speed at rated load (m/min)	Lowering speed at rated load (m/min)	Air cons. per hoist (m^3/min)	Travelling speed at rated load (m/min)	Air cons. per trolley (m^3/min)	Trolley flange adjustment (mm)
ULBS Series - Ultra-Low Headroom BOP Handling systems									
ULBS50LC2A2...	50	2	—	*Consult us*			*Consult us*		—
ULBS100LC2A4...	100	4	545	1.40	1.65	20	12	3.8	270-310
ULBS150LCA3...	150	6	733	0.90	1.10	20	12	7.6	270-310
ULBS200LCA4...	200	8	—	*Consult us*			*Consult us*		—

BOP Handling Systems
25 - 200 t Load Capacity

BS Series 25 t to 50 t

BS25LC2A2…
BS30LC2A3…
BS36LC2A3…
BS50LC2A4…

Dimensions are subject to change without notice. Please contact Client Services for certified prints.

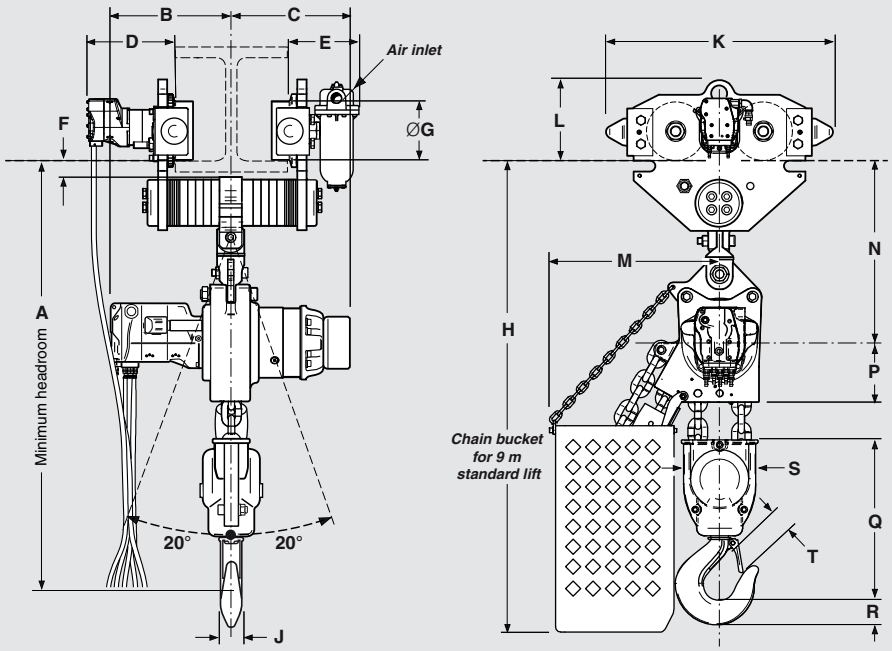

Dimensions in mm

Model number	A	B	C	D	E	F	G	H	J	K	L	M	N	P	Q	R	S	T	Air Inlet Ø
BS25LC2A2…	1125	357	310	292	242	40	160	1135	52	622	220	538	420	152	424	67	203	58	1 1/4" BSP
BS30LC2A3…	1195	396	390	303	279	50	225	1273	65	790	270	557	558	152	484	80	206	78	1 1/4" BSP
BS36LC2A3……	1195	396	390	303	279	50	225	1273	65	790	270	557	558	152	484	80	206	78	1 1/4" BSP
BS50LC2A4…	1240	430	370	303	279	50	225	1273	79	790	270	529	558	152	530	96	200	87	1 1/4" BSP

BS Series, 50 t to 100 t

BS50LC2A2…
BS75LC2A3…
BS100LC2A4…

Dimensions are subject to change without notice. Please contact Client Services for certified prints.

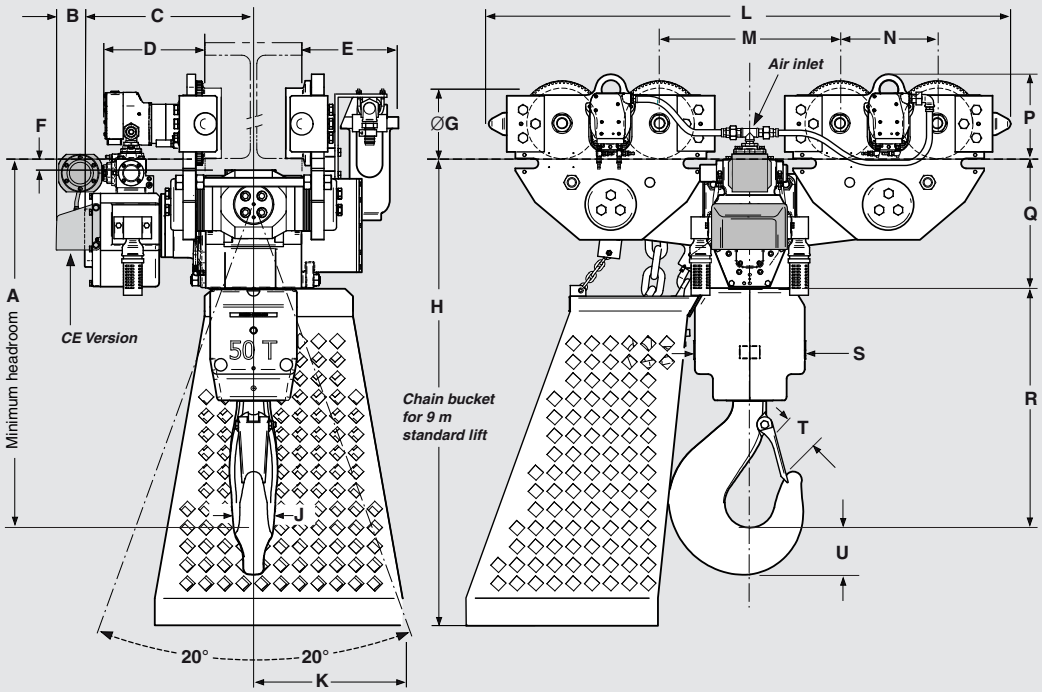

Dimensions in mm

Model number	A	B	C	D	E	F	G	H	J	K	L	M	N	P	Q	R	S	T	U	Air Inlet Ø
BS50LC2A2…	1048	92	460	297	311	40	200	1330	80	240	1406	550	240	220	461	576	276	87	120	1 1/4" BSP
BS75LC2A3…	1190	92	605	300	323	40	225	1340	119	346	1668	598	312	310	429	714	298	103	140	1 1/4" BSP
BS100LC2A4…	1156	92	632	302	120	40	225	1549	140	481	1700	598	312	270	483	763	352	118	160	1 1/4" BSP

BS Series – 150 t and 200 t

— *Dimensions are subject to change without notice. Please contact Client Services for certified prints.*

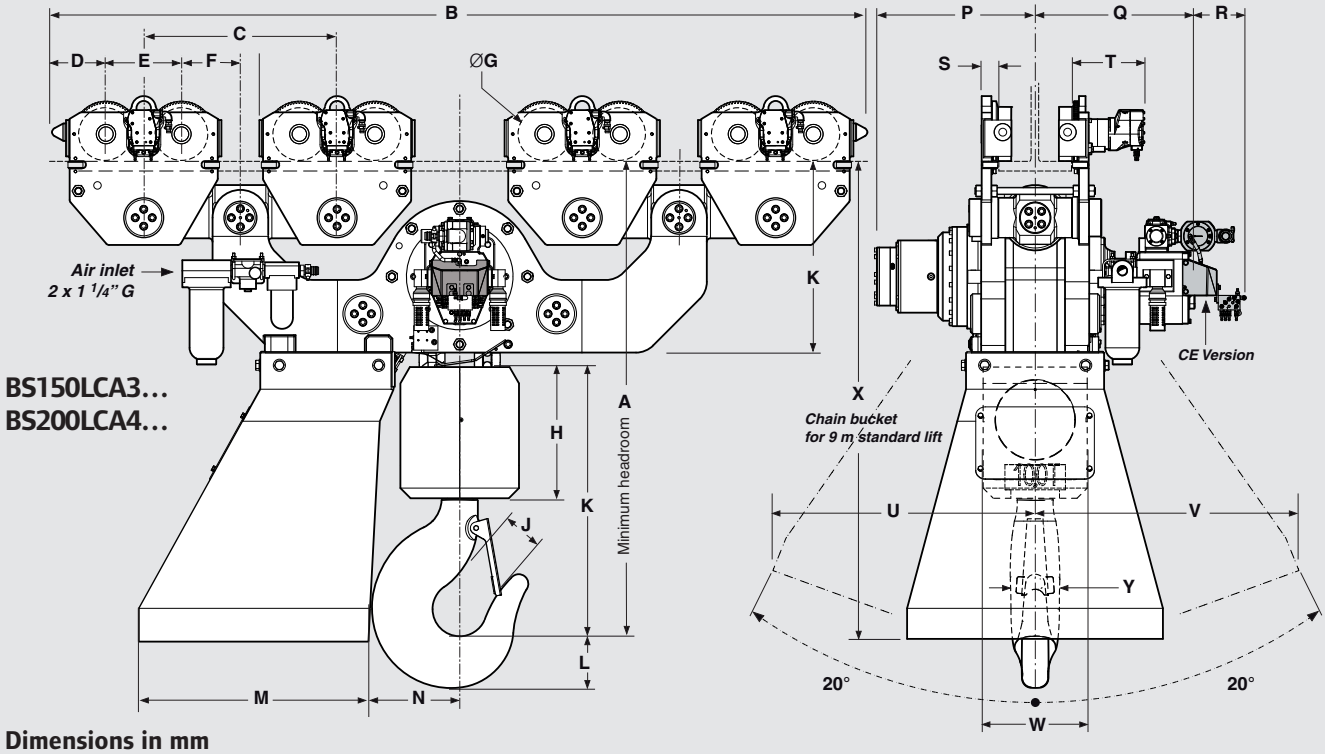

Dimensions in mm

Model number	A	B	C	D	E	F	G	H	J	K	L	M	N	P	Q	R	S	T	U	V	W	X	Y
BS150LCA3…	1880	3370	799	223	312	243	225	542	152	1090	190	950	408	664	749	123	40	300	1130	1060	430	1980	150
BS200LCA4…	1960	3370	799	223	312	243	225	542	165	1112	212	950	408	664	749	123	40	300	1092	1092	430	1980	170

ULBS Series – 50 t to 200 t

— *Dimensions are subject to change without notice. Please contact Client Services for certified prints.*

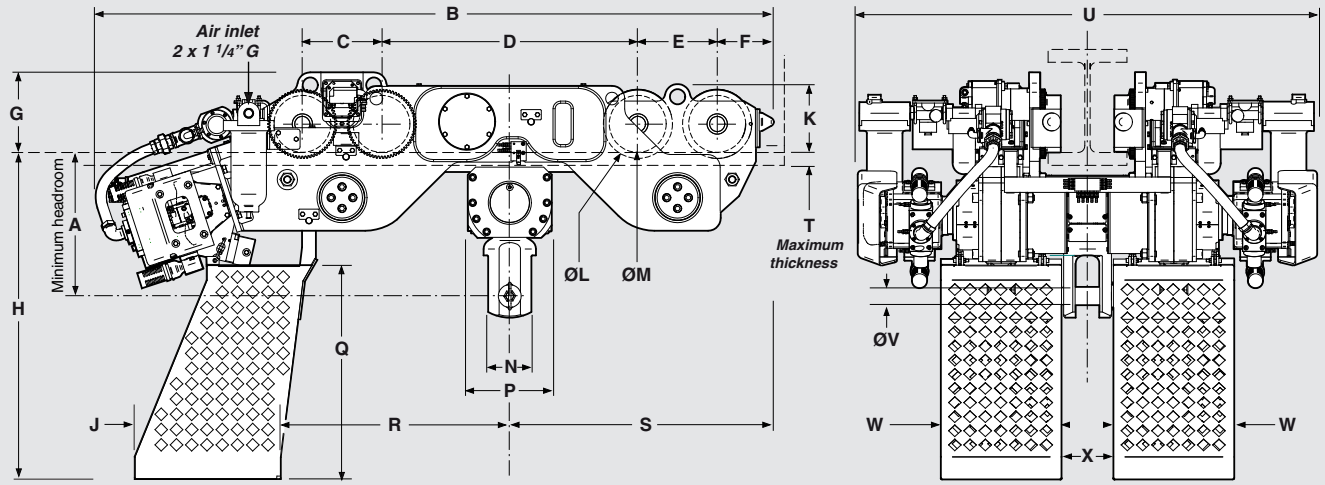

Dimensions in mm

Model number	A	B	C	D	E	F	G	H	J	K	L	M	N	P	Q	R	S	T	U	V	W	X
ULBS100LC2A4…	545	2670	312	1008	312	223	316	1286	578	270	272	225	170	330	843	899	1039	80	1807	72	475	188
ULBS150LCA3…	733	3578	312	2100	312	223	325	1694	606	325	272	225	221	421	1202	1096	1585	80	1769	85	606	23

BOP Handling Systems

50 - 200 t Load Capacity

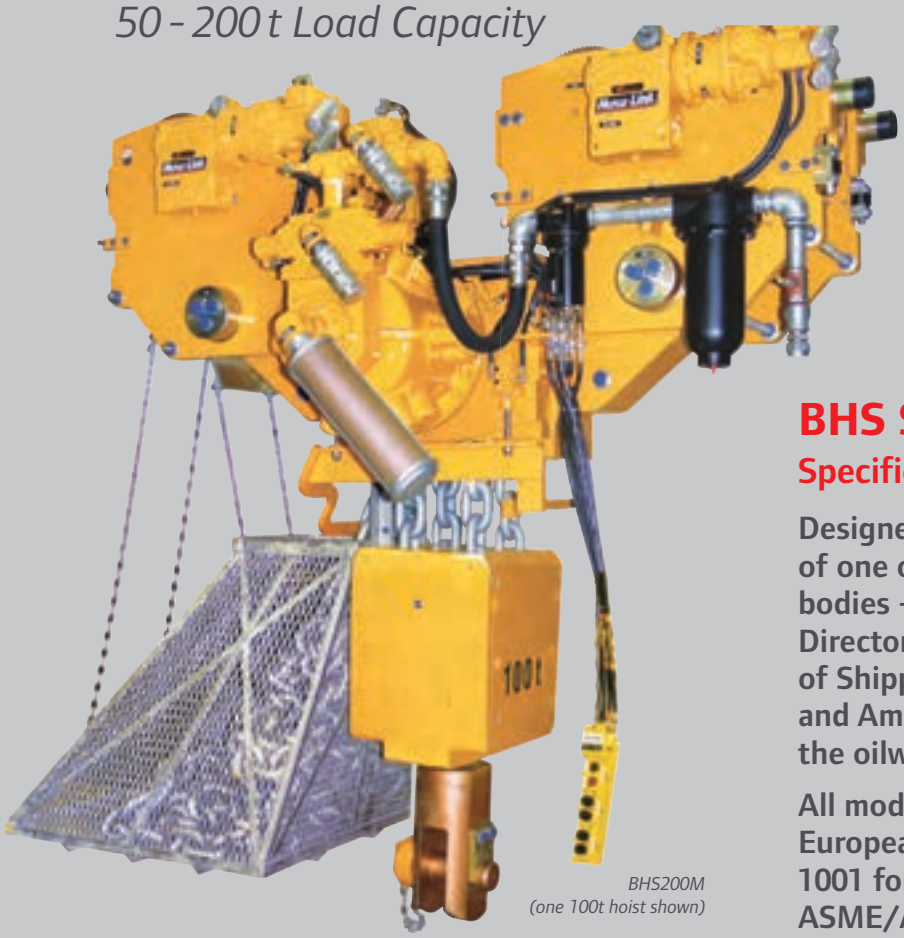

BHS200M
(one 100t hoist shown)

BHS Series

Specific Features

Designed to meet or exceed specifications of one or more of the following regulatory bodies - the Norwegian Petroleum Directorate (NPD), UK HSE, Lloyds Register of Shipping (LRS), Det Norske Veritas (DNV), and American Bureau of Shipping (ABS) for the oilwell drilling industry

All models meet the requirements of the European standards FEM 9.511 and FEM 1001 for lifting as well the U.S. standard ASME/ANSI B30.7.

- Radial piston air motor – hoist and trolley.
- 5:1 design factor.
- Standard design temperature TD = 0°C.
- All steel construction.
- Automatic fail safe, multi disc, motor brake on hoist.
- Articulated trolley allows limited side pulling operations (standard on all models - not available for BHS200M).
- Fully enclosed planetary gear box.
- Compact modular design.
- Corrosion resistant load chain.
- 9m height of lift standard on all models.
- Bottom block mounted on bearing with external lubrication point and water drain.
- Accu-Trol™ pendent with "emergency stop/start" feature and 9 m pendent hose.
- Limit switch for upper and lower over-travel protection.
- Lifting lugs for easy installation.
- Filter-Lubricator air preparation package mounted on unit.
- Corrosion resistant Marine 812 finish paint.
- Galvanised steel chain container.
- Trolley guide rollers, rubber bumpers, and rail sweeps.
- Manufacturer test certificate and maintenance manual.
- Exhaust mufflers.

Piston Motor

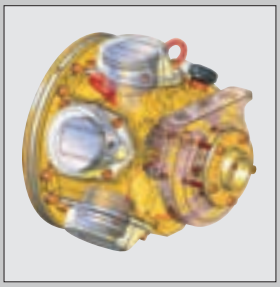

Ingersoll Rand radial piston air motor is characterised by:

- A positive starting torque.
- A variable speed control offering a precision spotting control at slow speeds.
- A superior reliability in harsh environments.
- Features an internal splash lubrication.

WARNING:
Standard hoist / trolley combinations purchased for BOP handling will void the warranty. They are not designed for this type of application.

BHS Series Specifications

BHS BOP handling systems are comprised of two trolley-mounted hoists. The total system capacity corresponds to the addition of the rated capacity of both hoists.

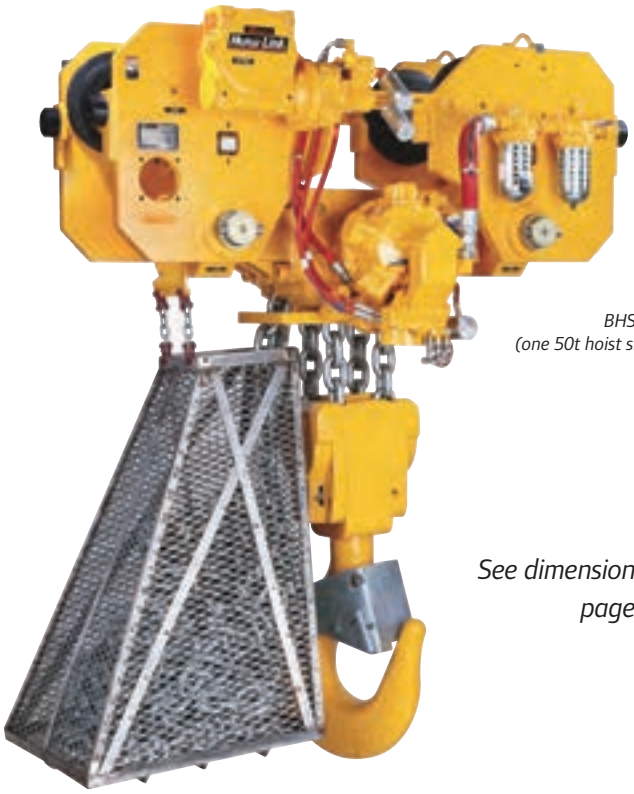

BHS100M
(one 50t hoist shown)

See dimensions on pages 60

Specifications at 6.3 bar dynamic pressure (when BOB handling system is running) — Working pressure 5 to 7 bar.
As per European standard EN range 14492-2 – Group of mechanism as per FEM 1Bm / ISO M3.

System model number	System capacity (t)	Falls of chain per hoist	Min. headroom (mm)	Lifting speed at rated load (m/min)	Lowering speed at rated load (m/min)	Motor power per hoist (hp)	Air cons. per hoist (m3/min)	Sound level (1) (dbA)	System weight (2) (kg)	Chain size (mm)	Chain weight/ 1m extra lift (kg)
BHS Series BOP Handling Systems – HOIST Sub-Assembly											
BHS50M…	50	2	1040	1.2	1.8	9.4	8.0	105	2616	22 x 66	21
BHS75M…	75	3	1243	0.80	1.10	9.4	8.0	105	2844	22 x 66	32
BHS100M…	100	4	1346	0.60	0.90	9.4	8.0	105	4527	22 x 66	43
BHS150M22…	150	6	1523	0.40	0.60	9.4	8.0	105	6770	22 x 66	63
BHS200M…	200	4	1745	0.45	0.70	23.0	14.2	115	14000	32 x 90	91

System model number	Number of wheels per hoist	Flange adjustment (mm)	Wheel tread diameter (mm)	Wheel loading per pair (kg)	Min. inside curve radius (m)	Number of motors per trolley	Air consumption per trolley (m3/min)	Max. ravelling speed at rated load (m/min)
BHS Series BOP Handling Systems – TROLLEY Sub-Assembly								
BHS50M…	8	152 - 203	175	6552	NR	1	1.4	12.
BHS75M…	8	203 - 254	229	9896	NR	1	1.4	12
BHS100M…	8	203 - 254	229	13104	NR	1	1.4	12
BHS150M22…	8	203 - 254	229	19100	NR	1	1.4	4.0
BHS200M…	8	203 - 254	330	25500	NR	2	2.8	3.9

(1) Sound pressure levels per hoist – measured per European standard EN 14492-2.
(2) Weight of the complete system (2 hoists) with standard height of lift (9 m) and standard length of control (9 m).

BHS Series - Standard Equipment & Options

In standard version, BHS Series BOP handling systems are fitted with the following equipment:

- Articulated trolley hoist allows limited side pulling operations (except for BHS200M)
- Accu-Trol pendent with start / stop button.
- Corrosion resistant load chain with 9 m height of lift as standard.
- Limit switch for upper and lower over-travel protection.
- Corrosion resistant Marine 812 finish paint.
- Galvanised steel chain container.
- Filter-Lubricator air preparation package mounted on unit.
- Trolley guide rollers, rubber bumpers, and rail sweeps.
- Exhaust mufflers.
- Manufacturer test certificate and maintenance manual.

Articulated trolley hoist

Accu-Trol™ pendent handle

Corrosion resistant load chain

Limit switches

Air preparation package

Trolley guide rollers, rubber bumpers & rail sweeps

Exhaust mufflers.

In CE version, BHS Series BOP handling systems are fitted with the additional following equipment:

- Built-in overload protection.
- Emergency stop button on pendent, acting on main air shut off valve.
- CE declaration of conformity.

Options

- Variable lengths of lift and pendent control hose.
- Rack and pinion trolley drive for positive traction.
- Clevis and shackle attachment in lieu of bottom hook.
- Corrosion resistant Marine 812-X paint system.
- Sandblast and carbozinc (primer only).
- 4 bar (57 psi) application models.
- Festooning systems.
- Trolleys for shipyard fabricated beams.
- Custom paint coating systems per owners specifications.
- Spark and corrosion resistant (S•COR•E) package. The S.COR.E spark resistant option for BHS Series is designed **for applications in zone 1 as per ATEX 94/9/CE Directive**.
  It includes as standard:
  R option: The product will be equipped with copper plated load hook(s) and trolley wheels. Zinc plated load and hand chain if applicable.

Copper plated load hook

BHS Series Ordering Menu

To order your BOP handling system, specify complete model number code as shown below. Also specify beam size, type and flange width.

B H S 5 0 M A 6 – 3 0 – 3 0 – K R

Series/Load capacity	Trolley Type	Flange adjust.	Control	Lift in feet	Control Drop
BHS50 2 x 25 t **BHS75** 2 x 37.5 t **BHS100** 2 x 50 t **BHS150** 2 x 75 t **BHS200** 2 x 100 t	**M*** Piston motor trolley. **RT*** Rack and pinion trolley drive for tapered beam flange. **RF*** Rack and pinion trolley drive for flat beam flange. * *Add the number "22" only for model BHS150 (e.g. BHS150M22...)*	**A** Standard. **B** 50 mm extension. **C** 100 mm extension. **D** 150 mm extension.	**5** 1 motor pendent (2 buttons with on-off). **6** 2 motor pendent (4 buttons with on-off). **7** 3 motor pendent (6 buttons with on-off).	**30** Standard height of lift 30 ft (9 m). **XX** Specify height in feet.	**30** Standard drop and/or hand chain drop in feet. **XX** Specify control drop in feet.

Options	
C1M3	ABS minus 20 degree C design temperature (tD).
C2M3	DNV minus 20 degree C design temperature (tD).
K	Clevis (in place of bottom hook).
M1	Per DIN 50049/EN10204 Para 2.2 "typicals" (1).
M2	Per DIN 50049/EN10204 Para 3.1 actual per product as purchased (2).
M3	Per DIN 50049/EN10204 Para 3.1 actual per product as delivered in final condition (1).
N4	American Bureau of Shipping "Certification of Drilling Systems".
N5	Det Norske Veritas "DNV-OS-E101 Drilling Plant".
P1	Marine 812-X paint system.
P2	Marine 812-X Paint System (isocyanate free paint system).
R	Copper plated (S·COR·E package). The product will be equipped with copper plated load hook(s) and trolley wheels.
W1	ABS witness test.
W2	DNV witness test.
W3	LRS witness test.
W4	Customer witness test.
-CE	Compliance with the European machinery directive.

(1) NOTES:

M1 *– Material traceability certificates according to EN 10204 (Ex DIN 50049) 2.2 on load bearing parts. This conformity document affirms (by the manufacturer) that parts are in compliance with the requirements of the order based on non-specific inspection and testing (i.e. results are typical material properties for these parts).*

M2 *– Material traceability certificates according to EN 10204 (Ex DIN 50049) 3.1 on load bearing parts. These documents affirm (by a department independent of the manufacturing department) that the actual parts used in the product are in compliance with the order based on specific inspection and testing (i.e. results are actual material properties for those parts).*

M3 *– Material traceability certificates according to EN 10204 (Ex DIN 50049) 3.1 on load bearing parts. These documents affirm (by a department independent of the manufacturing department) that the actual parts used in the product are in compliance with the order based on specific inspection and testing (i.e. results are actual material properties for those parts in a finished, as delivered condition).*

BHS150RF22

BOP Handling Systems
50 - 200 t Load Capacity

BHS Series 50 t to 100 t

BHS50M
BHS75M
BHS100M

Dimensions are subject to change without notice. Please contact Client Services for certified prints.

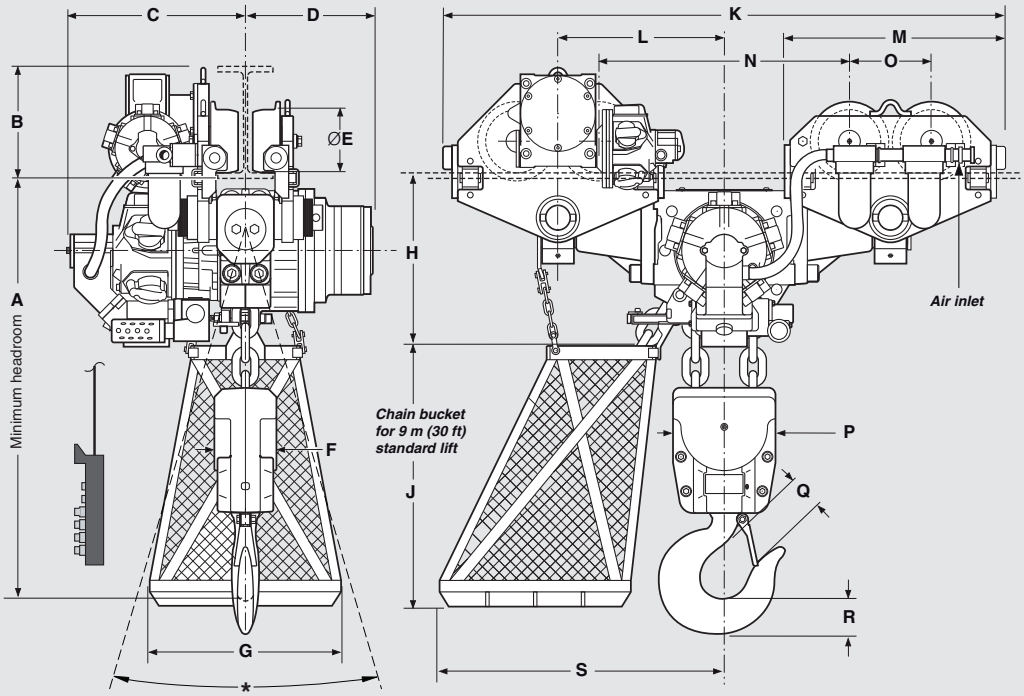

Dimensions in mm

Model number	A	B	C	D	E	F	G	H	J	K	L	M	N	O	P	Q	R	S	Air Inlet Ø
BHS50M...	1040	291	495	362	175	175	533	484	706	1568	578	616	699	229	286	102	92	795	1" NPT
BHS75M...	1243	330	572	438	229	283	610	487	859	1648	610	673	622	298	286	121	129	886	1" NPT
BHS100M...	1346	330	572	438	229	321	635	487	935	1648	610	673	622	298	286	165	165	922	1" NPT

(*) Contact client services for specifications.

BHS Series 150 t & 200 t

BHS150M22
BHS200M

Dimensions are subject to change without notice. Please contact Client Services for certified prints.

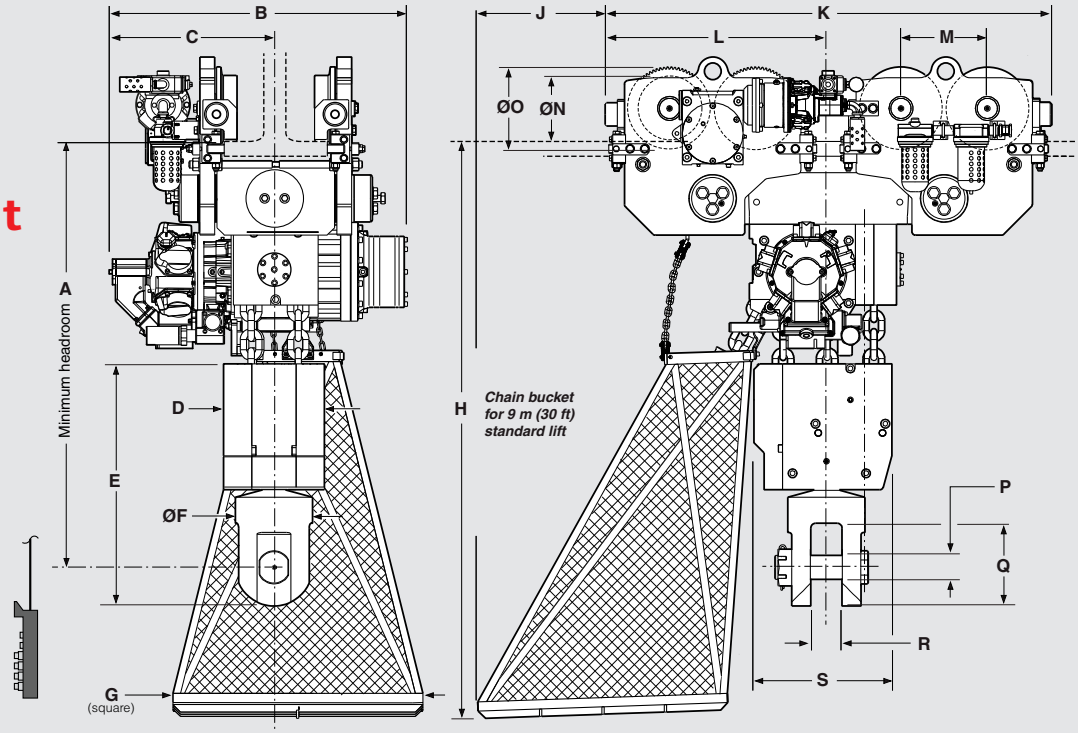

Dimensions in mm

Model number	A	B	C	D	E	F	G	H	J	K	L	M	N	O	P	Q	R	S	Air Inlet Ø
BHS150M22...	1493	1031	570	345	834	267	864	1994	440	1543	772	298	229	289	82	286	108	475	1" NPT
BHS200M...	1745	1694	989	508	1028	279	1016	1991	384	2405	1191	432	330	397	89	286	108	438	1 1/2" NPT

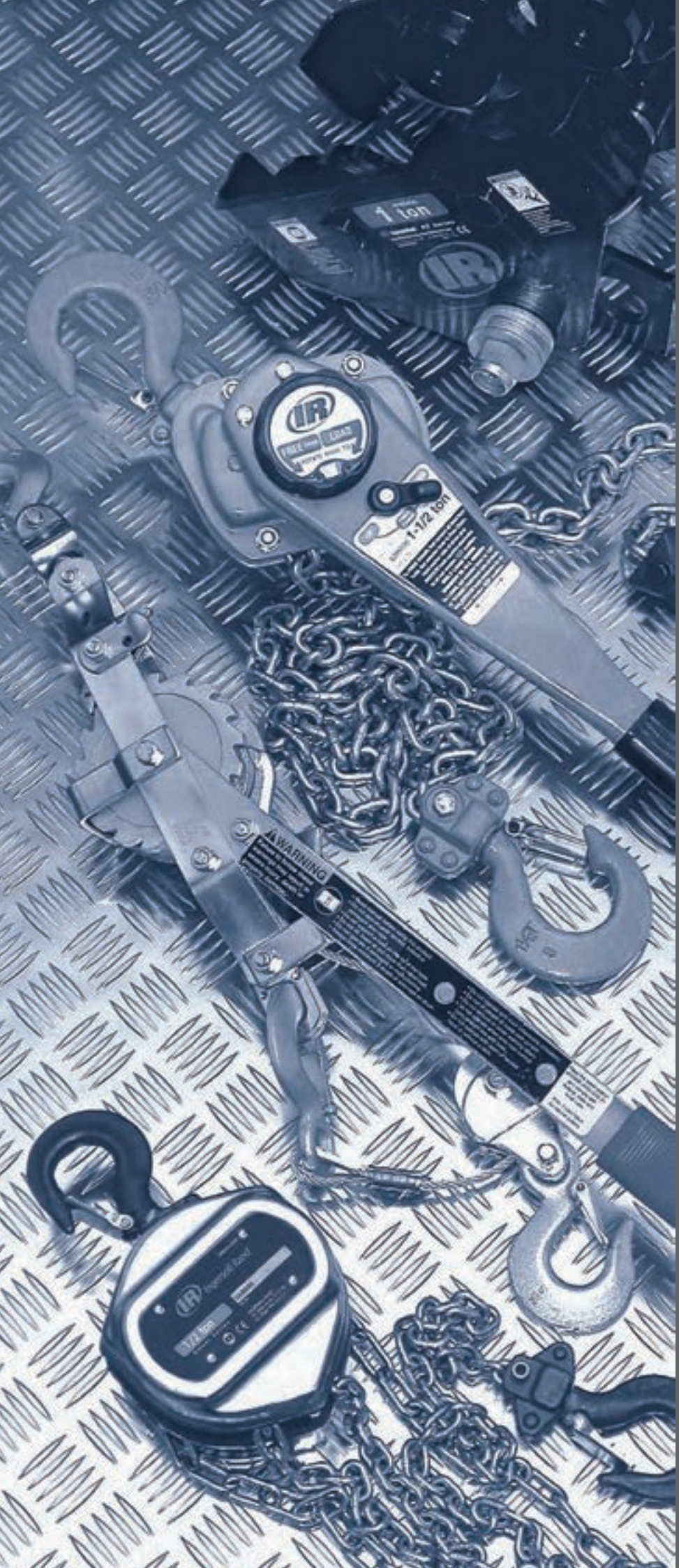

Manual Equipment

Ingersoll Rand also offers manual trolleys to equip your small capacity hoists and manual hoists which are very useful for casual material handling work.

Ingersoll Rand

Manual Equipment
Manual Lever Hoists

L5H Series

Heavy duty, high performance lever hoists

- Torsion-Lok™ brake system ensures positive brake engagement.
- 360° rotation handle needs only 15° handle movement to ratchet loads. A big plus in tight spaces.
- Rugged steel construction.
- Colour coded red/green indicator (load or free chain).
- Simple one-hand free chaining operation.

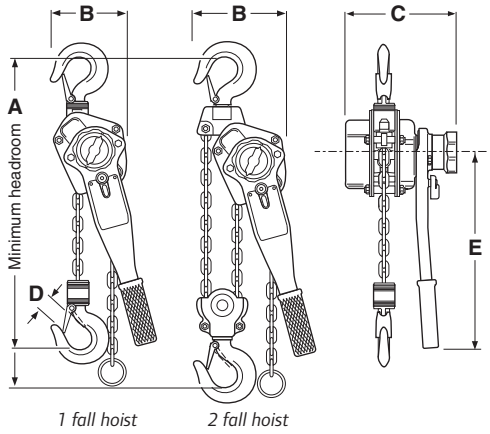

Model number	Nominal load capacity (t)	Pull to lift rated load (kg)	Number of falls	Height of lift (m)	Weight with 1.5 m lift (kg)	Chain weight/ 1m extra lift (kg)	DIMENSIONS A min. (mm)	B (mm)	C (mm)	D (mm)	E (mm)
L5H150	0.75	15.9	1	1.5 to 6	6.8	0.86	311	127	152	31	257
L5H300	1.5	18.2	1	1.5 to 6	9.5	1.13	349	147	168	38	368
L5H600	3.0	33.2	1	1.5 to 6	15.4	1.80	425	180	200	47	368
L5H1200	6.0	35.0	2	1.5 to 6	28.2	3.60	565	241	200	51	368

SLB Series

High performance, industrial lever hoists

- Automatic inertia brake – Engages if load is applied in free-chain mode, helping minimise operator setup error.
- Stamped steel construction for decreased weight and better impact resistance.
- Nickel/chrome plated for improved corrosion resistance.
- Efficient gear reduction for low handle effort.
- Easy one-handed operation for free chain positioning.

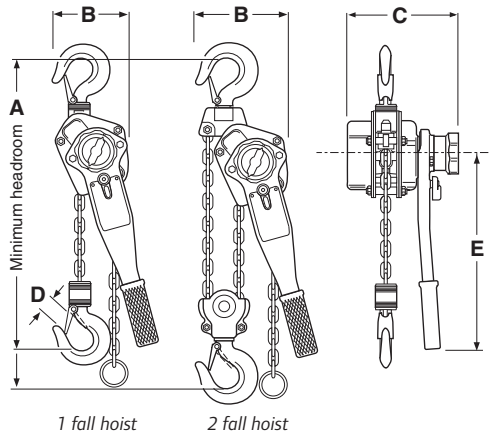

Model number	Nominal load capacity (t)	Pull to lift rated load (kg)	Number of falls	Height of lift (m)	Weight with 1.5 m lift (kg)	Chain weight/ 1m extra lift (kg)	DIMENSIONS A min. (mm)	B (mm)	C (mm)	D (mm)	E (mm)
SLB150	0.75	18.5	1	1.5 to 6	7.0	0.79	330	132	158	29	307
SLB200	1.0	27.0	1	1.5 to 6	7.0	0.79	366	140	163	32	307
SLB300	1.5	24.0	1	1.5 to 6	11.0	1.13	400	145	186	35	378
SLB600	3.0	24.0	1	1.5 to 6	20.0	2.20	521	198	213	44	419
SLB1200	6.0	26.0	2	1.5 to 6	30.4	4.40	640	231	213	50	419

L5H or SLB Series ordering menu

L 5 H 6 0 0 – 1 0 V – E

Series	Capacity		Height of lift (in feet)		Options	EC compliance (1)
L5H **SLB**	**150** 750 kg **200** 1000 kg (SLB Series only)	**300** 1500 kg **600** 3000 kg **1200** 6000 kg	**5** 5 ft (1.5 m) **10** 10 ft (3 m)	**15** 15 ft (4.5 m) **20** 20 ft (6 m)	**V** Overload protection (available on L5H only) **N** Corrosion resistant chain, nickel diffused (available on L5H only)	**E** Compliance with the European machinery directive

(1) SLB Series are CE compliant as standard. "-E" option is not required for these models.

VL2 Series

Premium hand chain hoists. Heavy duty, high performance

- Best in class hoists, built to be durable.
- High strength gear case and steel frame.
- Exclusive hand chain guide for smooth operation – Helps eliminate jamming when operated away from the load area. Ideal for "pick and drift" applications.
- Efficient gear reduction for easier lifting.
- Open frame design for self-cleaning, quick load sheave inspection and easy hoist maintenance.
- Premium alloy steel grade 100 load chain.
- Overload protection as standard.

VL2 hand chain guides.

VL2-020

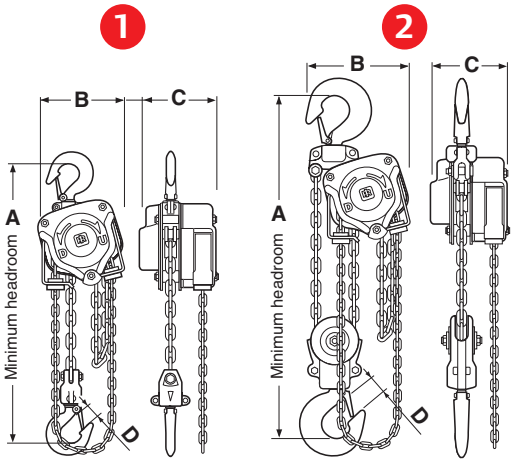

1 fall hoist *2 fall hoist*

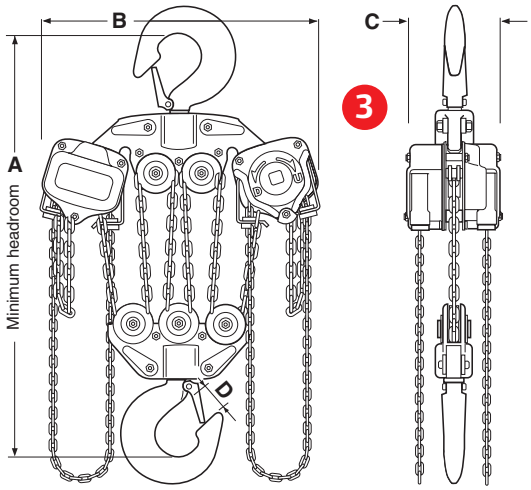

Multiple fall hoist

Specifications

Model number	Nominal load capacity (t)	Pull to lift rated load (kg)	Number of falls	Height of lift (m)	Weight with 3 m lift (kg)	Chain weight/ 1m extra lift (kg)	DIMENSIONS Dwg. Type	A min. (mm)	B (mm)	C (mm)	D (mm)
VL2-005	0.5	25.0	1	3 to 6	9.1	0.53	1	305	144	127	31
VL2-010	1.0	33.2	1	3 to 6	16.4	0.85	1	346	157	148	34
VL2-015	1.5	33.6	1	3 to 6	20.4	1.10	1	371	175	148	38
VL2-020	2.0	34.5	1	3 to 6	22.7	1.40	1	425	203	179	41
VL2-030	3.0	34.5	2	3 to 6	23.6	2.20	2	505	206	148	47
VL2-050	5.0	38.6	2	3 to 6	42.6	3.55	2	635	264	179	51
VL2-080	8.0	40.9	3	3 to 6	68.3	5.30	2	740	346	179	71
VL2-100	10.0	40.9	4	3 to 6	85.5	7.10	2	760	367	179	71
VL2-150	15.0	2 x 41	6	3 to 6	179.5	10.70	3	851	746	208	90
VL2-200	20.0	2 x 41	8	3 to 6	220.4	14.20	3	870	873	208	90

VL2 Series ordering menu

V L 2 – 0 8 0 C P 1 0 8 V N H – E

Series	Capacity	Spark resistance	Height of lift	Hand chain length	Options	EC compliance
VL2	005 0.5 t, 010 1 t, 015 1.5 t, 020 2 t, 030 3 t, 050 5 t, 080 8 t, 100 10 t, 150 15 t, 200 20 t	- Standard; CP Copper plated; SB Solid bronze	10 10 ft (3 m); 15 15 ft (4.5 m); 20 20 ft (6 m); XX Specify length in ft	8V 8 ft (2.4 m); XXV Specify length in ft	N Corrosion & spark resistant load chain; H Corrosion & spark resistant hand chain; P Marine paint; S Fabric chain bucket	E Compliance with the European machinery directive

Manual Equipment

Manual Hand Chain Hoists & Pullers

SMB Series

High performance and durable hand chain hoists

- Stamped steel construction for decreased weight and better impact resistance.
- Nickel/chrome plated for improved corrosion resistance.
- Efficient gear reduction for easier lifting.
- Zinc plated hand chain as standard.
- Standard overload protection to reduce abuse and increase safety.

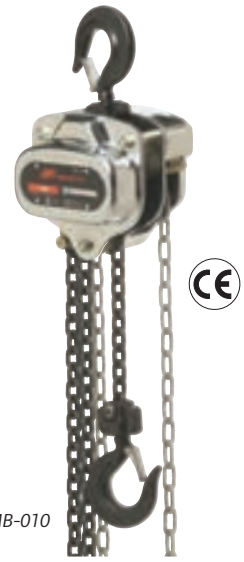

SMB-010

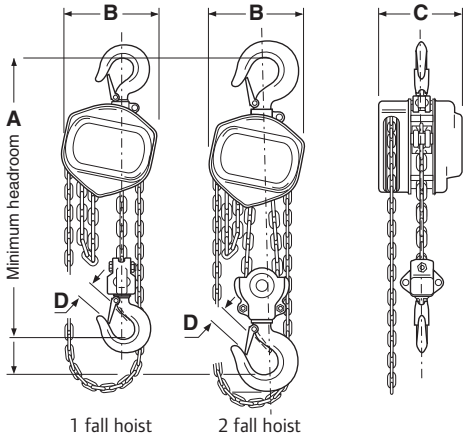

Specifications

Model number	Nominal load capacity (t)	Pull to lift rated load (kg)	Number of falls	Height of lift (m)	Weight with 3 m lift (kg)	Chain weight/ 1m extra lift (kg)	DIMENSIONS A min. (mm)	B (mm)	C (mm)	D (mm)
SMB005	0.5	25	1	3 to 6	10.7	0.53	325	131	137	28
SMB010	1.0	29	1	3 to 6	12.2	0.80	350	151	153	30
SMB020	2.0	35	1	3 to 6	19.3	1.40	463	192	176	38
SMB030	3.0	45	1	3 to 6	32.0	2.20	530	238	204	45
SMB050	5.0	38	2	3 to 6	41.0	3.55	710	285	188	55

SMB Series ordering menu

S M B **0 2 0** – **1 0** **8 V** – **N**

Series (1)	Capacity	Height of lift (in feet)	Hand chain length (in feet)	Options
SMB	**005** 0.5 t **010** 1 t **020** 2 t **030** 3 t	**10** 10 ft (3 m) **15** 15 ft (4.5 m) **20** 20 ft (6 m) XX Specify length	**8V** 8 ft (2.4 m) XX**V** Specify length	**N** Corrosion & spark resistant load chain

(1) SMB Series are CE compliant as standard.

P & C Series

Ratchet pullers – steel and aluminium

- 4:1 design factor for pulling applications.
- All models (except P15H) can be used in one or two falls configuration.
- Galvanised wire rope. C400S is fitted with non-conductive synthetic strap.
- **P15 Series:** all steel construction, plated for long life.
- **C400 Series:** lightweight aluminium design. Reversible handle for easy position changes.

P15D3H

C400S

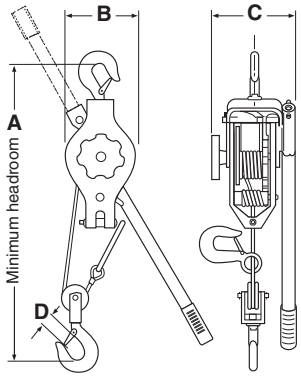

Specifications

Model number	Nominal load capacity (kg)	Pull to lift rated load (kg)	Number of falls	Pulling distance (m)	Cable diameter (mm)	Net weight (kg)	DIMENSIONS A min. (mm)	B (mm)	C (mm)	D (mm)
P15H	450	45	1	4.6	4.8	3.9	457	114	89	19
P15D3H	450 / 900	45 / 47	1 or 2	4.6 / 2.3	4.8	4.8	457 / 610	114	89	19
C400H	770 / 1540	26 / 28	1 or 2	6.0 / 3.0	6.3	7.3	432 / 559	127	178	22
C400S	900 / 1800	29 / 31	1 or 2	3.6 / 1.8	—	7.3	432 / 559	127	178	22

PT & GT Series Trolleys

Durable plain and geared trolleys

- 5:1 design factor for use with manual or powered hoists.
- Strong and durable steel construction, includes drop stops.
- Cast iron wheels with sealed, lube for life ball bearings.
- Universal profile to fit IPN and IPE beams.

PT010

PT Series plain trolleys: Available from 0.5 to 10 t capacity.

GT Series geared trolleys:
Available from 1 to 20 t capacity. Standard hand chain height 3m, or more on demand.

GT10-12-10

Specifications

Model number PLAIN TROLLEYS	Model number GEARED TROLLEY	Nominal load capacity (t)	Flange adjustment (mm)	Minimum beam height (mm)	Minimum curve radius (m)	Net weight PLAIN TROLLEY (kg)	Net weight GEARED TROLLEY (kg)
PT005-8		**0.5**	67 - 203	102	0.92	8.9	—
PT010-8	**GT010-8-10**	**1**	76 - 203	127	0.92	13.9	19.8
PT020-8	**GT020-8-10**	**2**	84 - 203	153	1.22	27.4	33.3
PT030-8	**GT030-8-10**	**3**	100 - 203	178	1.07	33.2	39
PT050-8	**GT050-8-10**	**5**	118 - 203	203	1.53	50	56
PT100-12	**GT100-12-10**	**10**	178 - 305	254	2.10	93	103
	GT200-12-10	**20**	178 - 305	305	3.50	—	245

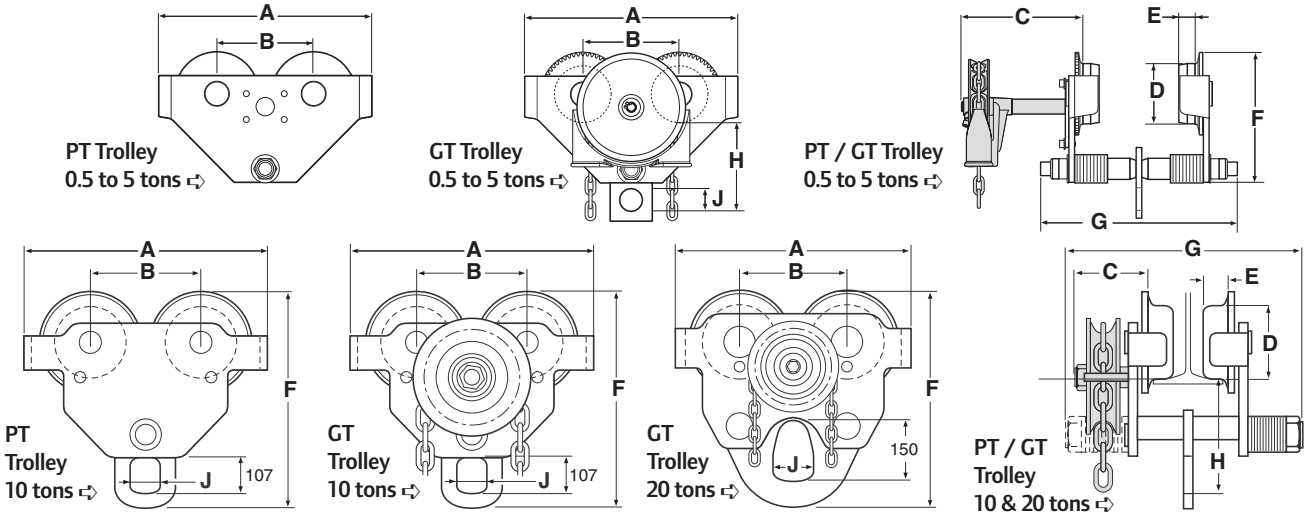

Dimensions in mm

Model number	A	B	C	D	E	F	G	H	J
PT005-8	254	114	–	53	19	169	311	149	40
PT010-8	330	132	–	70	19	176	327	151	40
PT020-8	380	172	–	108	29	190	350	154	40
PT030-8	356	162	–	115	29	218	359	200	65
PT050-8	394	180	–	115	40	249	397	207	65
PT100-12	455	200	–	151	51	490	528	300	82
GT010-8-10	330	132	230	70	19	176	327	151	40
GT020-8-10	380	172	228	108	29	190	350	154	40
GT030-8-10	356	162	237	115	29	218	359	200	65
GT050-8-10	394	180	247	115	40	249	397	207	65
GT100-12-10	455	200	–	151	51	490	528	300	82
GT200-12-10	642	300	–	200	66	622	572	266	110

PT & GT trolleys ordering menu

G T 0 3 0 - 8 - 1 0 S B

Series	Capacity	Hand chain	Option
PT Plain **GT** Geared	**005-8** 0.5 t **010-8** 1 t **020-8** 2 t **030-8** 3 t **050-8** 5 t **100-12** 10 t **200-12** 20 t	**10** 10 ft (3 m standard length) XX Specify length	**SB** Bronze wheels

Winch Check List

Distributor:..... **End user:** .....
Contact name phone: ..... **Email:** .....

Application description

Application: ❑ Pulling ❑ Lifting ❑ Dedicated man-riding ❑ Dual (utility lifting & man-riding)
Capacity: ..... ❑ kg ❑ lbs ❑ metric ton Line speed: ..... ❑ m/min ❑ fpm
Distance: ..... ❑ m ❑ ft

Application notes: .....
.....

Power supply & controls

❑ **Air** Pressure: ..... ❑ bar ❑ psi Flow capacity: ..... ❑ m³/min ❑ cfm
Control type: ❑ Local throttle ❑ Remote full flow throttle ❑ Remote pilot pendent ❑ Pendent
❑ Electric-over-air ❑ Customer-supplied

❑ **Hydraulic** Pressure: ..... ❑ bar ❑ psi Flow capacity: ..... ❑ l/min ❑ gpm
Control type: ❑ Local throttle ❑ Remote throttle ❑ Customer-supplied

---

Controls distance from equipment (if applicable): ..... ❑ m ❑ ft

Brakes & auxiliary holding devices

❑ Manual band ❑ Auto band ❑ Auto disc ❑ Manual drum locking pin ❑ Manual pawl & ratchet ❑ Auto pawl & ratchet

Wire Rope

Wire rope diameter: ..... ❑ mm ❑ inch

Type: ❑ Steel ❑ Stainless ❑ Galvanised ❑ Synthetic ❑ Factory-spooled ❑ Customer-supplied

Construction Requirements:.....
Length: ..... ❑ m ❑ ft End attachments:..... Take-off angle (drum winch only): .....

Equipment options

General: ❑ Limit switch ❑ Overload limiter ❑ Low temperature* ❑ EC compliance
❑ Traceability requirements* ❑ Type approval*

Winches: ❑ Drum guard ❑ Press roller ❑ Drum divider ❑ Drum grooving
❑ Construction cage ❑ Free-spool clutch ❑ Horizontal load reversing ❑ Manual level wind
❑ Underwound ❑ Automatic level wind (Accu-Spool™) ❑ Constant tensioning
❑ Manifold (excluding electric) ❑ Slack wire protection ❑ Skid frame

Air: ❑ Filter ❑ Lubricator ❑ Regulator ❑ Liquidator ❑ Muffler(s)

Hydraulic ❑ HPU* ❑ Filtration*

Equipment option notes:.....
.....

Paint

❑ Standard ❑ Sandblast w/ zinc primer only ❑ Marine 812 ❑ Marine 812-X

Paint/coating notes: .....

Service options

❑ Extended warranty ❑ Spare parts kit ❑ Service start-up/Training support

Additional information

Winch Series under consideration: ❑ Force 5 Infinity™ ❑ Liftstar® ❑ Pullstar® ❑ Other, specify: :.....

Replacing equipment (make, model): .....

Size restrictions:..... ❑ mm ❑ inch Duty cycle:..... ❑ min/hr ❑ hrs/day ❑ %

Ambient conditions (temperature, humidity, elevation, etc): .....
..... Serving:.....industry

Additional notes: .....
.....

**Please specify.*

Hoist Check List

Distributor:..... **End user:** .....
Contact name phone: ..... **Email:** .....

Application description

Application: ❑ Lifting ❑ Pulling
Capacity: ..... ❑ kg ❑ lbs ❑ metric ton
Height of lift: ..... ❑ m ❑ ft — Minimum headroom .....❑ cm ❑ inch
Lifting speed at nominal load:..... ❑ m/min ❑ fpm — Lowering speed at nominal load:..... ❑ m/min ❑ fpm

Application notes: .....
.....
.....

Power supply & controls

❑ **Air** Pressure: ..... ❑ bar ❑ psi Flow capacity: ..... ❑ m^3/min ❑ cfm
Control type: ❑ Remote pilot pendent ❑ Full flow pendent ❑ Hand chain
❑ Electric-over-air ❑ Customer-supplied

❑ **Hydraulic** Pressure: ..... ❑ bar ❑ psi Flow capacity: ..... ❑ l/min ❑ gpm
Control type: ❑ Local throttle ❑ Remote throttle ❑ Customer-supplied

Control length: ..... ❑ m ❑ ft

Suspension type

❑ Swivel top hook ❑ Fixed lug
❑ Manual geared trolley ❑ Manual plain trolley Rigid mounting ❑ yes ❑ No
Motorised trolley ❑ / Travelling speed required: ..... ❑ m/min ❑ ft/min / Control combined with hoist ❑ yes ❑ No
Control length: ..... ❑ m ❑ ft
Beam size/Flange width ..... ❑ mm ❑ inch Beam type: ❑ Flat (IPE) ❑ Tapered (IPN)

Equipment options

General: ❑ EC compliance ❑ Soft chain bucket ❑ Metal chain bucket
❑ Cast iron pendent ❑ Spark resistant for ATEX zone 1 ❑ Low temperature operation*
❑ Type approval* ❑ Witness test* ❑ Material traceability
❑ Clevis and shackle attachment in place of bottom hook ❑ Rack & pinion driven trolley
Air: ❑ Filter ❑ Lubricator ❑ Regulator ❑ Liquidator ❑ Muffler(s)

Equipment option notes:.....
.....

Paint ❑ Standard ❑ Sandblast w/ zinc primer only ❑ Marine 150 µ ❑ Offshore 290 µ
Paint/coating notes: .....

Service options ❑ Extended warranty ❑ Spare parts kit ❑ Service start-up/Training support

Additional information

Hoist Series under consideration: ❑ CLK ❑ MLK ❑ Liftchain® standard Series ❑ Liftchain® low headroom Series
❑ Liftchain® miner Series ❑ Other, specify: .....
Replacing equipment (make, model): .....
Size restrictions:..... ❑ mm ❑ inch Duty cycle:..... ❑ min/hr ❑ hrs/day ❑ %
Ambient conditions (temperature, humidity, elevation, etc): .....
..... Serving:.....industry
Additional notes: .....
.....

**Please specify.*

Ingersoll Rand

Ingersoll Rand (NYSE:IR) advances the quality of life by creating and sustaining safe, comfortable and efficient environments. Our people and our family of brands — including Club Car®, Ingersoll Rand®, Schlage®, Thermo King® and Trane® — work together to enhance the quality and comfort of air in homes and buildings, transport and protect food and perishables, secure homes and commercial properties, and increase industrial productivity and efficiency. Ingersoll Rand products range from complete compressed air systems, tools and pumps to material handling systems. The diverse and innovative products, services and solutions enhance our customers' energy efficiency, productivity and operations. Ingersoll Rand is a $14 billion global business committed to a world of sustainable progress and enduring results. For more information, visit ingersollrand.com or ingersollrandproducts.com.

Club Car® Ingersoll Rand® SCHLAGE® THERMO KING® TRANE®

ingersollrandproducts.com

Nothing contained on these pages is intended to extend any warranty or representation, expressed or implied, regarding the product described herein. Any such warranties or other terms and conditions of sale of products shall be in accordance with Ingersoll Rand's standard terms and conditions of sale for such products, which are available upon request.

Product improvement is a continuing goal at Ingersoll Rand. Designs and specifications are subject to change without notice or obligation.

© 2012 Ingersoll-Rand Company — ENG32725